GENERAL NOTES:

1. SERIES VPF 8000 ALUMINUM AWNING WINDOW–LARGE MISSILE IMPACT RESISTANT, SHOWN ON THIS PRODUCT EVALUATION DOCUMENT (P.E.D.) HAS BEEN VERIFIED FOR COMPLIANCE IN ACCORDANCE WITH THE 2020 (7th EDITION) OF THE FLORIDA BUILDING CODE. SERIES VPF 8000 ALUMINUM AWNING WINDOW MAY BE INSTALLED AT HIGH VELOCITY HURRICANE ZONES (H.V.H.Z) AND OUT OF IT (N.H.V.H.Z)

   DESIGN WIND LOADS SHALL BE DETERMINED AS PER SECTIONS 1620 AND 1609 OF THE THE ABOVE MENTIONED CODE, USING ASCE 7–16 AND SHALL NOT EXCEED THE MAXIMUM (A.S.D.) DESIGN PRESSURE RATINGS INDICATED ON NOTE 2 BELOW.

   IN ORDER TO VERIFY THE ABOVE CONDITION, ULTIMATE DESIGN WIND LOADS DETERMINED PER ASCE 7–16 SHALL BE FIRST REDUCED TO A.S.D. DESIGN WIND LOADS BY MULTIPLYING THEM BY 0.6 IN ORDER TO COMPARE THESE W/ MAX. (A.S.D.) DESIGN PRESSURE RATINGS INDICATED ON NOTE 2 BELOW.

   IN ORDER TO VERIFY THAT ANCHORS ON THIS P.E.D., AS TESTED, WERE NOT OVERSTRESSED, A 33% INCREASE IN ALLOWABLE STRESS FOR WIND LOADS WAS **NOT** USED IN THEIR ANALYSIS. FASTENERS SPACING IN WOOD HAS BEEN DETERMINED IN ACCORDANCE WITH N.D.S. 2018.
   THIS PRODUCT'S ADEQUACY FOR IMPACT AND WIND RESISTANCE HAS BEEN VERIFIED IN ACCORDANCE WITH SECTIONS 1626 & 1609.1.2 OF THE ABOVE MENTIONED CODE AS PER PROTOCOLS TAS–201, TAS–202, TAS–203, PER FENESTRATION TESTING LABORATORY REPORT # **9073** AND AS PER SUBMITTED STRUCTURAL CALCULATIONS, PERFORMED AS PER SECTIONS 1616 & 1604 OF THE FLORIDA BUILDING CODE.

2. **MAXIMUM A.S.D. DESIGN PRESSURE RATINGS FOR THIS WINDOW SHALL BE AS SHOWN ON SHEET 27.**

3. **SERIES VPF 8000 ALUMINUM AWNING WINDOW WILL NOT REQUIRE A HURRICANE PROTECTION DEVICE.**

4. **SERIES VPF 8000 ALUMINUM AWNING WINDOW ARE APPROVED FOR AIR AND WATER INFILTRATION.**

5. ALL ALUMINUM EXTRUSIONS IN CONTACT WITH DISSIMILAR MATERIALS SHALL COMPLY WITH SECTION III–6 OF THE 2015 ALUMINUM DESIGN MANUAL.

6. ALL COMPONENTS FOR THIS PRODUCT SHALL BE AS PER BILL OF MATERIAL & COMPONENTS SHEETS 2, 3 & 4.

7. ALL SCREWS USED FOR ASSEMBLY CONNECTIONS (METAL TO METAL) TO BE STAINLESS STEEL 401 AISI SERIES & SHALL COMPLY W/ FLORIDA BUILDING CODE SECTION 2411.3.3.4.

8. WOOD BUCKS BY OTHERS, MUST BE ANCHORED PROPERLY TO TO TRANSFER LOADS TO THE BUILDING STRUCTURE. WOOD BUCKS MUST BE SOUTHERN PINE #2, G=0.55, AND SHALL COMPLY WITH SECTION 2411.3.3.3 OF THE FLORIDA BUILDING CODE.

(8.1) 2X WOOD BUCKS MUST BE PROPERLY ANCHORED TO EXISTING STRUCTURE TO TRANSFER LOADS TO IT. ANCHORAGE IS INDEPENDENT OF WINDOW FRAME ANCHORAGE. WINDOW FRAME MUST BE SEPARATELY ANCHORED TO 2X WOOD BUCK FOLLOWING DETAILS ON THIS DRAWING.

(8.2) 1X WOOD BUCK (OR ANY WOOD BUCK LESS THAN 2X) MUST BE PROPERLY ANCHORED TO EXISTING STRUCTURE TO TRANSFER LOADS TO IT. WINDOW FRAME ANCHOR SHALL BE USED TO ATTACH 1X WOOD BUCK TO EXISTING STRUCTURE BY DRIVING ANCHOR THRU BOTH WINDOW FRAME & 1X WOOD BUCK INTO EXISTING STRUCTURE W/ PROPER EMBEDMENT AND EDGE DISTANCE AS SHOWN ON THIS DRAWING.

(8.3) WINDOW FRAME WITH ADAPTOR (COMPONENT # 6) MAY BE DIRECTLY CONNECTED TO EXISTING STRUCTURE WITH NO NEED OF WOOD BUCKS WHEN MASONRY OPENING IS NOT LARGER THAN ACTUAL WINDOW OVERALL DIMENSIONS. HOWEVER, SHIMS (SEE NOTE 10) MAY BE ALLOWED AT WINDOW FRAME ANCHOR LOCATION IF NEEDED.

9. **ANCHOR NOTES:** EMBEDMENT AND EDGE DISTANCE ARE BEYOND ANY FINISH.

(A) TO EXISTING POURED CONCRETE: (MIN. f'c = 3000 psi)
– 1/4"ø TAPCON ANCHOR W/ 1 1/2" MIN. EMBEDMENT, 4" MIN. EDGE DISTANCE & 3" MIN. SPACING, AS MANUFACTURED BY ITW/BUILDEX, INC. (COMPONENT 12). SEE NOTE 8.

– 1/4"ø KWIK–CON II W/ 1 3/4" MIN. EMBEDMENT, 2 1/2" MIN. EDGE DISTANCE & 2" MIN. SPACING, AS MANUFACTURED BY HILTI, INC. (COMPONENT 12A). SEE NOTE 8.

(B) TO EXISTING A.S.T.M. C–90 CONCRETE BLOCK WALL.
– 1/4"ø TAPCON ANCHOR W/ 1" MIN. EMBEDMENT, 4" MIN. EDGE DISTANCE & 4" MIN. SPACING. AS MANUFACTURED BY ITW/BUILDEX, INC. (COMPONENT 12). SEE NOTE 8.

– 1/4"ø KWIK–CON II W/ 1" MIN. EMBEDMENT, 2 1/2" MIN. EDGE DISTANCE & 3" MIN. SPACING, AS MANUFACTURED BY HILTI, INC. (COMPONENT 12A). SEE NOTE 8.

(C) TO EXISTING 2xP.T. WOOD BUCK, OR WOOD STRUCTURE MIN. EDGE DISTANCE (E.D.)=1" & 3" MIN. SPACING.
– 1/4"ø–14 TAPCON ANCHORS W/ 1 1/2" MIN. PENETRATION, 1" MIN. EDGE DISTANCE & 3" MIN. SPACING. AS MANUFACTURED BY ITW/BUILDEX, INC. (COMPONENT 12). SEE NOTE 8.

– 1/4"ø KWIK–CON II W/ 1 1/2" MIN. EMBEDMENT, 1" MIN. EDGE DISTANCE & 3" MIN. SPACING, AS MANUFACTURED BY HILTI, INC. (COMPONENT 12A). SEE NOTE 8.

(D) TO EXISTING MIN. 1/8" THICK ALUMINUM TUBE (6063–T5 ALLOY) MIN. EDGE DISTANCE (E.D.) = 1/2" & 2" MIN. SPACING.
– 1/4"ø–14 TEK SCREW, AS MANUFACTURED BY ITW/BUILDEX, INC. (COMPONENT 13). THREADS SHALL GO THRU THE TUBE THICKNESS.

(E) TO EXISTING MIN. 1/8" THICK STEEL MEMBER (ASTM A–500, A–653 OR A–36) MIN. EDGE DISTANCE (E.D.) = 1/2" & 2" MIN. SPACING.
– 1/4"ø–14 TEK SCREW, AS MANUFACTURED BY ITW/BUILDEX, INC. (COMPONENT 13). THREADS SHALL GO THRU THE FULL TUBE THICKNESS.

10. PROVIDE 1/4" MAX. LOAD BEARING SHIM SPACE (TYP.).

11. (a) THIS P.E.D. PREPARED BY THIS ENGINEER IS GENERIC AND DOES NOT PROVIDE INFORMATION FOR A SITE SPECIFIC PROJECT; i.e. WHERE THE SITE CONDITIONS DEVIATE FROM THE P.E.D.

    (b) CONTRACTOR TO BE RESPONSIBLE FOR THE SELECTION, PURCHASE AND INSTALLATION INCLUDING LIFE SAFETY OF THIS PRODUCT, BASED ON THIS P.E.D., PROVIDED HE/SHE DOES NOT DEVIATE FROM THE CONDITIONS DETAILED ON THIS DOCUMENT. CONSTRUCTION SAFETY AT SITE IS THE CONTRACTOR'S RESPONSIBILITY.

    (c) THIS P.E.D. WILL BE CONSIDERED INVALID IF ALTERED BY ANY MEANS.

    (d) ORIGINAL P.E.D. SHALL BEAR THE DATE AND ORIGINAL SEAL AND SIGNATURE OF THE PROFESSIONAL ENGINEER OF RECORD THAT PREPARED IT.

12. SERIES VPF 8000 ALUMINUM AWNING WINDOW MANUFACTURER'S LABEL SHALL BE LOCATED ON A READILY VISIBLE LOCATION AT PRODUCT IN ACCORDANCE WITH SECTION 1709.5 OF THE FLORIDA BUILDING CODE. ONE LABEL SHALL BE PLACED FOR EVERY UNIT.

THIS DRAWING SHALL ONLY BE USED TO OBTAIN PERMITS IN THE STATE OF FLORIDA

WALTER A. TILLIT JR. LICENSE No. 44167 STATE OF FLORIDA PROFESSIONAL ENGINEER

P.E. SEAL/SIGNATURE/DATE

FLORIDA BUILDING CODE (HIGH & NON HIGH VELOCITY HURRICANE ZONE)

©2020 TILTECO, INC.

TILTECO INC.
TILLIT TESTING & ENGINEERING COMPANY
6355 N.W. 36th. St., Ste. 305, VIRGINIA GARDENS, FL. 33166
Phone : (305)871–1530 . Fax : (305)871–1531
CA–0006719
WALTER A. TILLIT Jr. P.E.
FLORIDA Lic. # 44167

SERIES VPF 8000 ALUMINUM AWNING WINDOW–LMI

ALUMINA DISTRIBUTION CENTER
15002 N.W. 107 AVENUE, SUITE # 1
HIALEAH GARDENS, FL. 33018
PHONE: (305) 444–1198

REV. NO	DESCRIPTION	DATE	REV. No	DESCRIPTION	DATE
1	OLD 20–002	08/03/20	3		
2			4		

F.P.
DRAWN BY:

08/03/20
DATE:

20–227
DRAWING No.

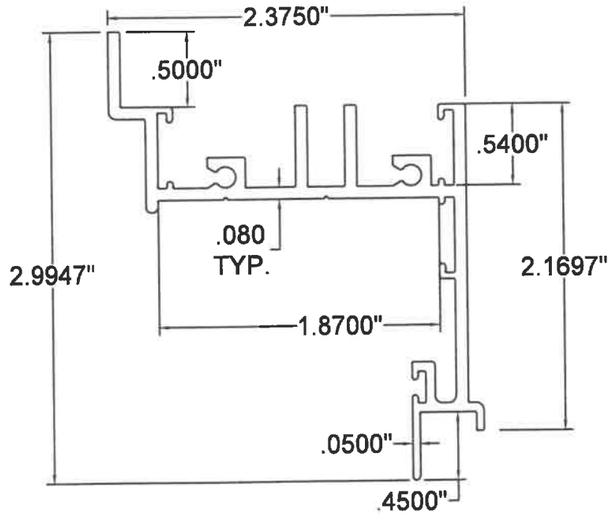

1 FRAME

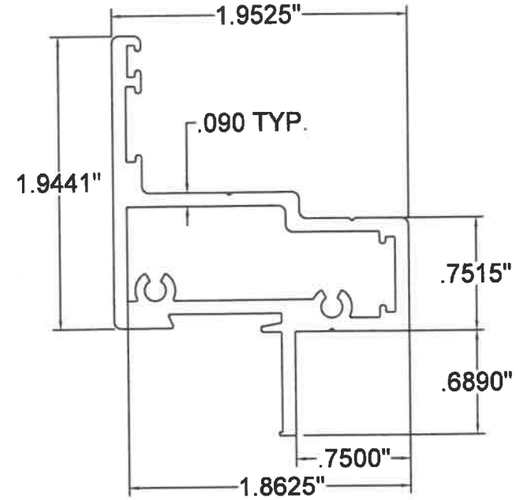

2 VENT FRAME

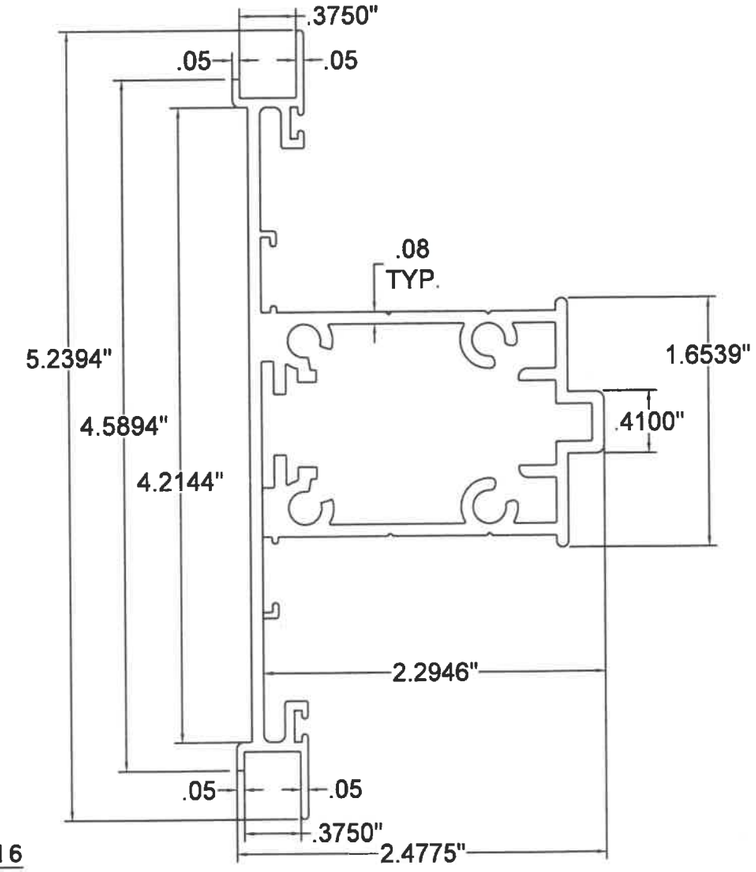

3 CENTER POST

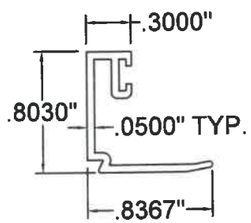

4A GLAZING BEAD 5/16

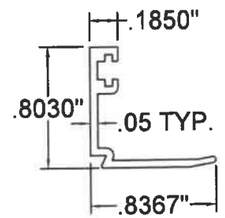

4B GLAZING BEAD 7/16

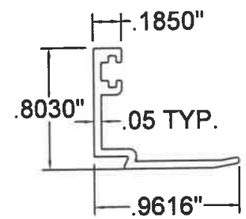

4C GLAZING BEAD 9/16

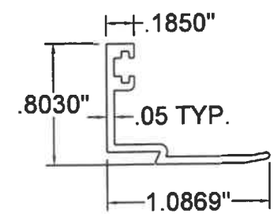

4D GLAZING BEAD 11/16

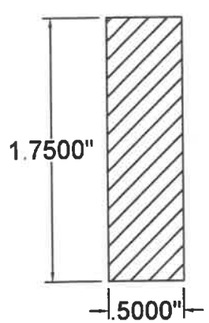

5 ALUM. INSERT BAR

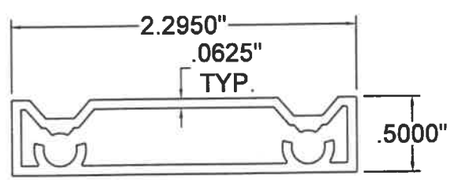

6 EQUAL FRAME ADAP.

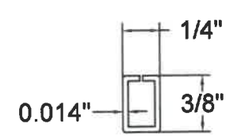

39 INSULATED GLASS UNIT SPACER

COMPONENTS

SCALE 1"=1"

WALTER A. TILLIT JR. LICENSE No. 44167 STATE OF FLORIDA PROFESSIONAL ENGINEER

P.E. SEAL/SIGNATURE/DATE

FLORIDA BUILDING CODE (HIGH & NON HIGH VELOCITY HURRICANE ZONE)

©2020 TILTECO, INC.

TILTECO INC.

TILLIT TESTING & ENGINEERING COMPANY
6355 N.W. 36th. St., Ste. 305, VIRGINIA GARDENS, FL 33166
Phone : (305)871-1530 , Fax : (305)871-1531
CA-0006719
WALTER A. TILLIT Jr. P.E.
FLORIDA Lic. # 44167

SERIES VPF 8000 ALUMINUM AWNING WINDOW-LMI

ALUMINA DISTRIBUTION CENTER
15002 N.W. 107 AVENUE, SUITE # 1
HIALEAH GARDENS, FL. 33018
PHONE: (305) 444-1198

REV. NO	DESCRIPTION	DATE	REV. No	DESCRIPTION	DATE
1	OLD 20-002	08/03/20	3		
2			4		

F.P.
DRAWN BY:

08/03/20
DATE:

20-227
DRAWING No.

SHEET 2 OF 34

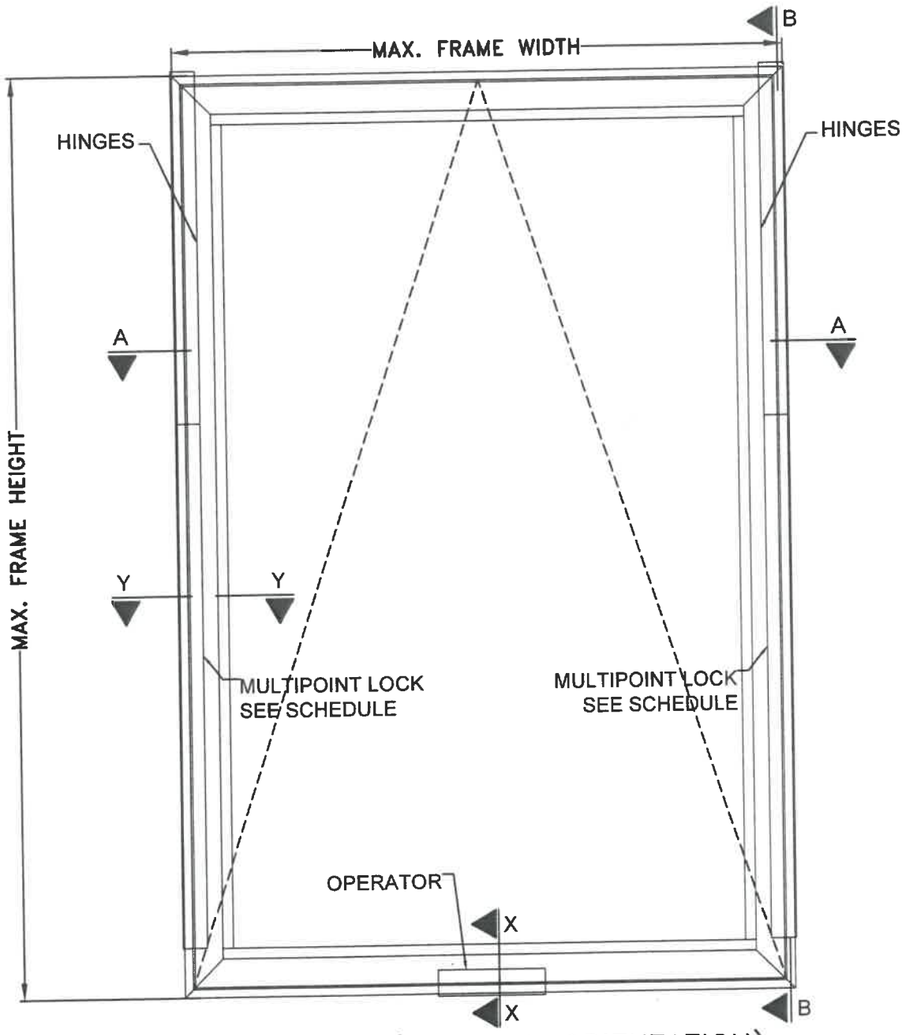

ELEVATION (VERTICAL ORIENTATION)

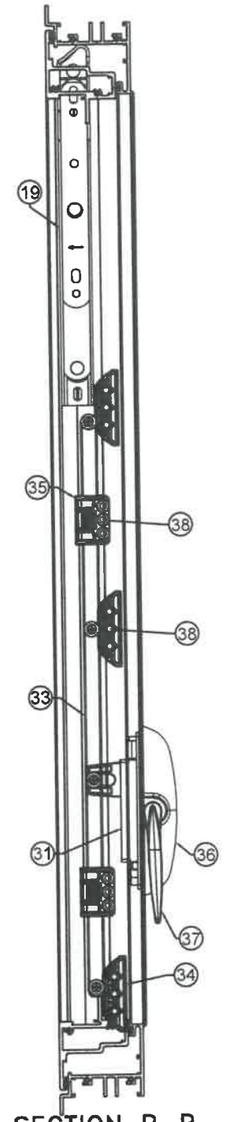

SECTION B–B

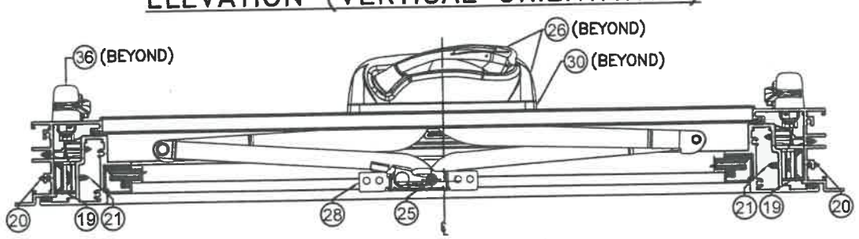

SECTION A–A

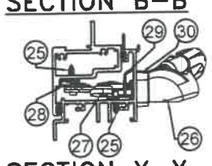

SECTION X–X

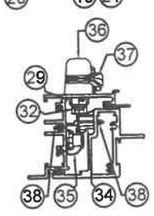

SECTION Y–Y

MULTIPOINT LOCK SCHEDULE	
FRAME HEIGHT	# OF MULTIPOINT
33 1/4" TO 39 1/4"	2
39 1/4" TO 45 1/4"	3
45 1/4" TO 51 1/4"	4
51 1/4" TO 57 1/4"	4
57 1/4" TO 63 1/4"	5
63 1/4" TO 69 1/4"	5
69 1/4" TO 74"	5

HARDWARE DETAILS:
REQ'D. AT EA. VENT
(TYP.): SEE SHEETS
7, 8 & 9.

WALTER A. TILLIT JR. LICENSE No. 44167 STATE OF FLORIDA PROFESSIONAL ENGINEER

SEAL/SIGNATURE/DATE

FLORIDA BUILDING CODE (HIGH & NON HIGH VELOCITY HURRICANE ZONE)

©2020 TILTECO, INC.

TILTECO INC.
TILLIT TESTING & ENGINEERING COMPANY
6355 N.W. 36th. St., Ste. 305, VIRGINIA GARDENS, FL 33166
Phone : (305)871-1530 . Fax : (305)871-1531
CA-0006719
WALTER A. TILLIT Jr. P.E.
FLORIDA Lic. # 44167

SERIES VPF 8000 ALUMINUM AWNING WINDOW–LMI

ALUMINA DISTRIBUTION CENTER
15002 N.W. 107 AVENUE, SUITE # 1
HIALEAH GARDENS, FL. 33018
PHONE: (305) 444-1198

REV. NO	DESCRIPTION	DATE	REV. No	DESCRIPTION	DATE
1	OLD 20-002	08/03/20	3		
2			4		

F.P.
DRAWN BY:

08/03/20
DATE:

20-227
DRAWING No.

SHEET 3 OF 34

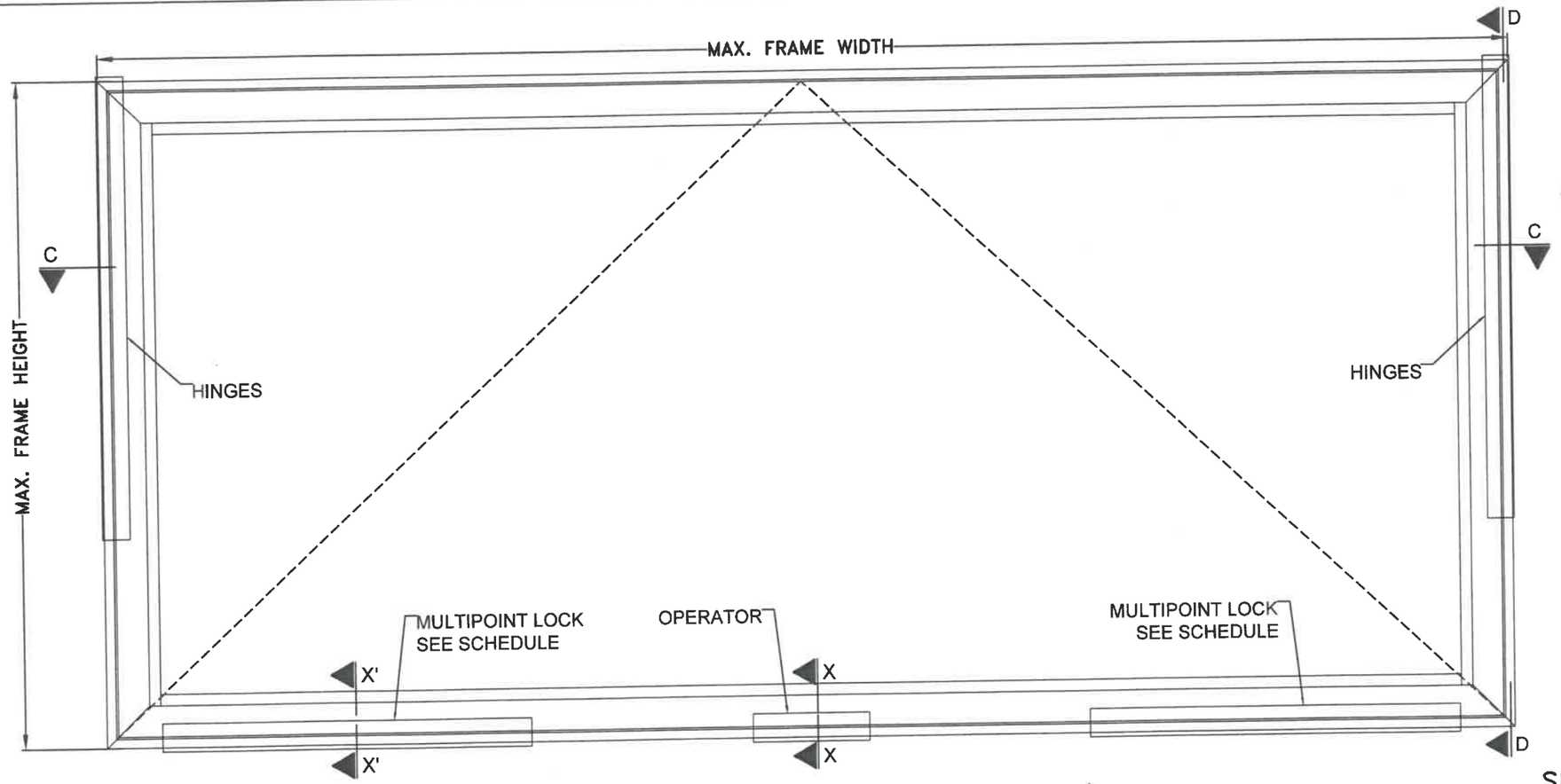

ELEVATION (HORIZONTAL ORIENTATION)

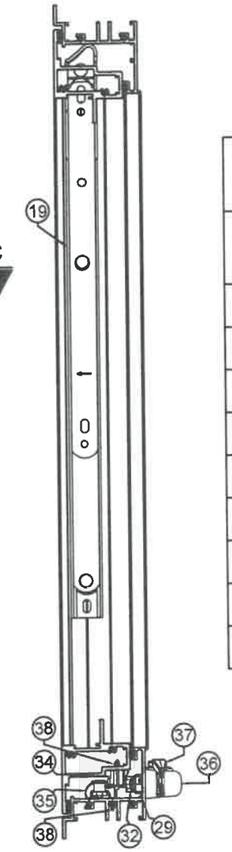

SECTION D–D

MULTIPOINT LOCK SCHEDULE	
FRAME WIDTH	# OF MULTIPOINT
33 1/4" TO 39 1/4"	2
39 1/4" TO 45 1/4"	3
45 1/4" TO 51 1/4"	4
51 1/4" TO 57 1/4"	4
57 1/4" TO 63 1/4"	5
63 1/4" TO 69 1/4"	5
69 1/4" TO 75 1/4"	5
75 1/4" TO 81 1/4"	6
81 1/4" TO 84"	6

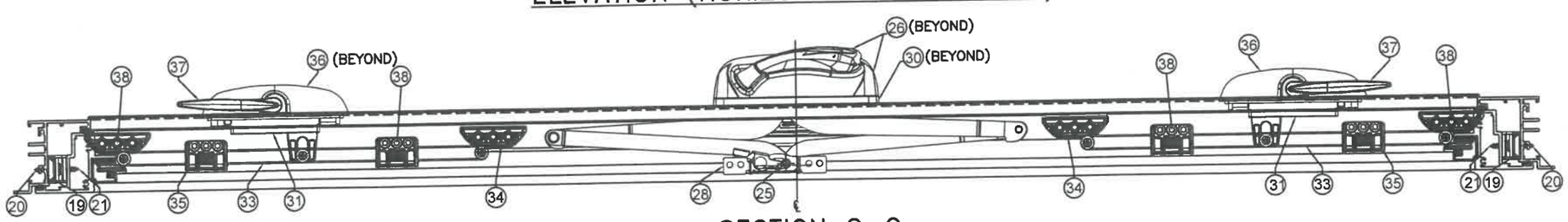

SECTION C–C

HARDWARE DETAILS: REQ'D. AT EA. VENT (TYP.): SEE SHEETS 7, 8 & 9.

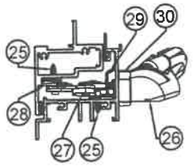

SECTION X–X

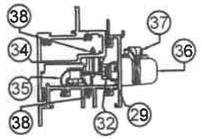

SECTION X'–X'

WALTER A. TILLIT JR. LICENSE No. 44167 STATE OF FLORIDA PROFESSIONAL ENGINEER

P.E. SEAL/SIGNATURE/DATE

FLORIDA BUILDING CODE (HIGH & NON HIGH VELOCITY HURRICANE ZONE)

©2020 TILTECO, INC.

TILTECO INC.

TILLIT TESTING & ENGINEERING COMPANY
8355 N.W. 36th. St., Ste. 305, VIRGINIA GARDENS, FL 33166
Phone : (305)871-1530 . Fax : (305)871-1531
CA-0006719
WALTER A. TILLIT Jr. P.E.
FLORIDA Lic. # 44167

SERIES VPF 8000 ALUMINUM AWNING WINDOW–LMI

ALUMINA DISTRIBUTION CENTER
15002 N.W. 107 AVENUE, SUITE # 1
HIALEAH GARDENS, FL. 33018
PHONE: (305) 444-1198

REV. NO	DESCRIPTION	DATE	REV. No	DESCRIPTION	DATE
1	OLD 20-002	08/03/20	3		
2			4		

F.P.
DRAWN BY:

08/03/20
DATE:

20-227
DRAWING No.

SHEET 3A OF 34

BILL OF MATERIALS: AWNING WINDOW (SEE SHEETS 7, 8 & 9)

COMPONENT #	DESCRIPTION	DIMENSIONS/REMARKS	MATERIAL
1	FRAME	SHEET 2	6063-T6 ALUMINUM
2	VENT FRAME	SHEET 2	6063-T6 ALUMINUM
3	CENTER POST	SHEET 2	6063-T6 ALUMINUM
4A	GLAZING BEAD 5/16"	SHEET 2	6063-T6 ALUMINUM
4B	GLAZING BEAD 7/16"	SHEET 2	6063-T6 ALUMINUM
4C	GLAZING BEAD 9/16"	SHEET 2	6063-T6 ALUMINUM
4D	GLAZING BEAD 11/16"	SHEET 2	6063-T6 ALUMINUM
5	ALUMINUM INSERT BAR	SHEET 2	6063-T6 ALUMINUM
6	EQUAL FRAME ADAPTOR	SHEET 2	6063-T6 ALUMINUM
8	FRAME & VENT ASSEMBLY SCREWS	#8-32 x 3/4" P.H. M.S.	ST. STEEL
9	CENTER POST ASSEMBLY SCREWS	#14 x 2-3/4" H.H. TEK SCREWS	STEEL
12	1/4"Ø TAPCON (ITW /BUILDEX)	1/4" Ø (SEE NOTE 9/1)	STEEL
12A	1/4"Ø-14 KWIK-CON II (HILTI)	1/4" Ø (SEE NOTE 9/1)	STEEL
13	1/4"Ø-14 TEK SCREW (ITW /BUILDEX)	1/4" Ø (SEE NOTE 9/1)	STEEL
14	CORNER LOCK, 0.050" THK. x 1.7430" x 1.7430" x 0.473"	SULLIVAN ASSOCIATES	ST. STEEL
15	GLAZING BULB	0.250"x0.345" (ULTRAFAB)	VINYL
16	STRUCTURAL SILICONE DOW CORNING 995	ALL AROUND GLASS	SILICONE
17	BUMPER SPHEAR	-	SILICONE
18	NON STRUCTURAL SILICONE DOW CORNING CONTRACTORS, CONCRETE SEALANT (CCS)	AS SHOWN	SILICONE
19	4 BAR HINGE HEAVY DUTY	INTERLOCK	304 S.S.
20	HINGE MOUNTING SCREWS AT FRAME	#10 x 5/8" PH SMS. SEE SHEET 3	ST. STEEL
21	HINGE MOUNTING SCREWS AT VENT	#10 x 5/8" PH SMS. SEE SHEET 3	ST. STEEL
22	SINGLE ARM OPERATOR LEFT HANDING FOR CASEMENT	SEE SHEET 3	ST. STEEL
23	SINGLE ARM OPERATOR LEFT HANDING SCREWS	#10-24 X 1/2" F.H. M.S.	ST. STEEL
24	SINGLE ARM OPERATOR TRACK	SEE SHEET 3	-
25	SINGLE ARM OPERATOR TRACK SCREWS & SASH BRACKET MOUNTING SCREW & AWNING OPERATOR NARROW-STAINLESS	#8-32 X 5/8" F.H. SCREWS	ST. STEEL
26	OPERATOR COVER AND HANDLE	SEE SHEET 3	-
27	AWNING OPERATOR NARROW-STAINLESS	SEE SHEET 3	ST. STEEL
28	AWNING SASH BRACKET	SEE SHEET 3	-
29	RETAINER CLIP	SEE SHEET 3	ST. STEEL
30	CASEMENT & AWNING FACE SPACER	SEE SHEET 3	-
31	MULTI-POINT LOCK MECHANISM	SEE SHEET 3	ST. STEEL
32	MULTI-POINT LOCK MECHANISM MOUNTING SCREWS	#8-32 X 3/4" F.H. MS	ST. STEEL
33	LOCKING BARS	SEE SHEET 3	ST. STEEL
34	CASEMENT STRIKE	SEE SHEET 3	-
35	CASEMENT GUIDE	SEE SHEET 3	-
36	SNAP ON COVER	SEE SHEET 3	-
37	SNAP ON HANDLE	SEE SHEET 3	-
38	LOCK MOUNTING SCREW AT VENT AND FRAME	#8-32 X 3/4" F.H. MS	ST. STEEL
39	INSULATED GLASS UNIT SPACER	SEE SHEET 2	3105-H24 ALUMINUM
40	SETTING BLOCK FOR GLASS TYPE Ⓐ , Ⓑ , Ⓑ1 , Ⓒ , Ⓒ1 , Ⓓ	1/16" X 5/16" OR 7/16" OR 9/16" OR 11/16"	EPDM (FRANK LOWE)

WALTER A. TILLIT JR. LICENSE No. 44167 STATE OF FLORIDA PROFESSIONAL ENGINEER

8/3/2020

SEAL/SIGNATURE/DATE

FLORIDA BUILDING CODE (HIGH & NON HIGH VELOCITY HURRICANE ZONE)

©2020 TILTECO, INC.

TILTECO INC.
TILLIT TESTING & ENGINEERING COMPANY
6355 N.W. 36th. St., Ste. 305, VIRGINIA GARDENS, FL 33166
Phone : (305)871-1530 . Fax : (305)871-1531
CA-0006719
WALTER A. TILLIT Jr. P.E.
FLORIDA Lic. # 44167

SERIES VPF 8000 ALUMINUM AWNING WINDOW-LMI

ALUMINA DISTRIBUTION CENTER
15002 N.W. 107 AVENUE, SUITE # 1
HIALEAH GARDENS, FL 33018
PHONE: (305) 444-1198

REV. NO	DESCRIPTION	DATE	REV. No	DESCRIPTION	DATE
1	OLD 20-002	08/03/20	3		
2			4		

F.P.
DRAWN BY:

08/03/20
DATE:

20-227
DRAWING No.

GLASS SCHEDULE

COMPONENT #	DESCRIPTION	MATERIAL
A	5/16" NOMINAL LAMINATED GLASS W/ 1/8" H.S. GLASS +0.090" TROSIFOL PVB INTERLAYER BY KURARAY AMERICA, INC. + 1/8" H.S. GLASS.	GLASS
B	7/16" NOMINAL LAMINATED GLASS W/ 3/16" H.S. GLASS +0.090" TROSIFOL PVB INTERLAYER BY KURARAY AMERICA, INC. + 3/16" H.S. GLASS.	GLASS
B1	7/16" NOMINAL LAMINATED GLASS W/ 3/16" H.S. GLASS +0.090" SENTRYGLAS® INTERLAYER BY KURARAY AMERICA, INC. + 3/16" H.S. GLASS.	GLASS
C	9/16" NOMINAL LAMINATED GLASS W/ 1/4" H.S. GLASS +0.090" TROSIFOL PVB INTERLAYER BY KURARAY AMERICA, INC. + 1/4" H.S. GLASS.	GLASS
C1	9/16" NOMINAL LAMINATED GLASS W/ 1/4" H.S. GLASS +0.090" SENTRYGLAS® INTERLAYER BY KURARAY AMERICA, INC. + 1/4" H.S. GLASS.	GLASS
D	11/16" NOMINAL INSULATED-LAMINATED GLASS W/ 1/8" TEMPERED GLASS OUT BOARD -1/4 ARGON SPACER + 1/8 H.S. GLASS +0.090" TROSIFOL PVB INTERLAYER BY KURARAY AMERICA, INC. + 1/8" H.S. GLASS.	GLASS

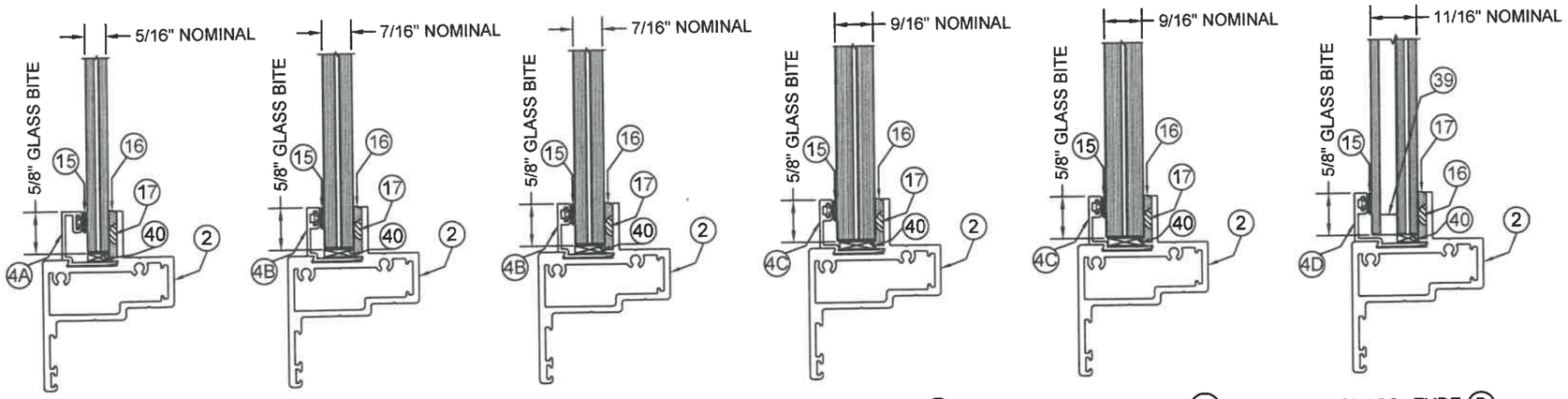

GLASS TYPE (A) GLASS TYPE (B) GLASS TYPE (B1) GLASS TYPE (C) GLASS TYPE (C1) GLASS TYPE (D)

GLASS CONFIGURATION

WALTER A. TILLIT JR. LICENSE No. 44167 STATE OF FLORIDA PROFESSIONAL ENGINEER

SEAL/SIGNATURE/DATE

FLORIDA BUILDING CODE (HIGH & NON HIGH VELOCITY HURRICANE ZONE)

©2020 TILTECO, INC.

TILTECO INC.

TILLIT TESTING & ENGINEERING COMPANY
6355 N.W. 36th. St., Sts. 305, VIRGINIA GARDENS, FL 33166
Phone : (305)871-1530 . Fax : (305)871-1531
CA-0006719
WALTER A. TILLIT Jr. P.E.
FLORIDA Lic. # 44167

SERIES VPF 8000 ALUMINUM AWNING WINDOW-LMI

ALUMINA DISTRIBUTION CENTER
15002 N.W. 107 AVENUE, SUITE # 1
HIALEAH GARDENS, FL. 33018
PHONE: (305) 444-1198

REV. NO	DESCRIPTION	DATE	REV. No	DESCRIPTION	DATE
1	OLD 20-002	08/03/20	3		
2			4		

F.P.
DRAWN BY:

08/03/20
DATE:

20-227
DRAWING No.

MAX. A.S.D. PRESSURE RATING FOR A GIVEN GLASS TYPE AND CORRESPONDING MAX. VENT WIDTHS AND VENT HEIGHTS AT VERTICAL ORIENTATION					
GLASS TYPE	MAX. A.S.D. DESIGN PRESSURE RATING	MAX. VENT WIDTH "a"	MAX. VENT HEIGHT "b"	MAX. D.L.O. WIDTH (a)	MAX. D.L.O. HEIGHT (b)
A, B, C, D	+72.0 , -72.0 psf	41"	72 1/2"	35 3/16"	67 3/16"
B1, C1	+105.0 , -105.0 psf.	41"	53 3/8"	35 3/16"	48 1/16"
B1, C1	+110.0 , -110.0 psf.	39"	56 3/8	33 3/16"	51 1/16"
B1, C1	+120.0 , -120.0 psf.	36"	61 3/8"	30 3/16"	56 1/16"

MAX. A.S.D. PRESSURE RATING FOR A GIVEN GLASS TYPE AND CORRESPONDING MAX. VENT WIDTHS AND VENT HEIGHTS AT HORIZONTAL ORIENTATION					
GLASS TYPE	MAX. A.S.D. DESIGN PRESSURE RATING	MAX. VENT WIDTH "a"	MAX. VENT HEIGHT "b"	MAX. D.L.O. WIDTH (a)	MAX. D.L.O. HEIGHT (b)
A, B, C, D	+72.0 , -72.0 psf	82 1/2"	40 1/2"	77 3/16"	35 3/16"
B1, C1	+110.0 , -110.0 psf.	56 3/8	39"	51 1/16"	33 3/16"
B1, C1	+120.0 , -120.0 psf.	61 3/8"	36"	56 1/16"	30 3/16"

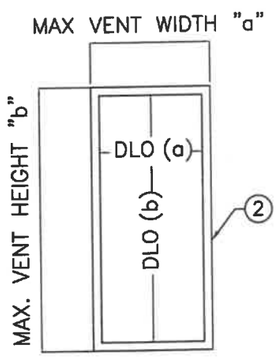

VENT ELEVATION
(VERTICAL ORIENTATION)

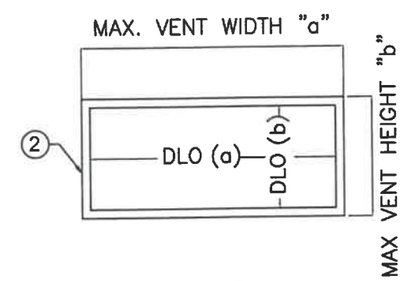

VENT ELEVATION
(HORIZONTAL ORIENTATION)

WALTER A. TILLIT JR.
LICENSE
No. 44167
STATE OF
FLORIDA
PROFESSIONAL ENGINEER

P.E. SEAL/SIGNATURE/DATE

FLORIDA BUILDING CODE (HIGH & NON HIGH VELOCITY HURRICANE ZONE)

©2020 TILTECO, INC.

TILTECO INC.
TILLIT TESTING & ENGINEERING COMPANY
6355 N.W. 36th. St., Ste. 305, VIRGINIA GARDENS, FL 33166
Phone : (305)871-1530 . Fax : (305)871-1531
CA-0006719
WALTER A. TILLIT Jr. P.E.
FLORIDA Lic. # 44167

SERIES VPF 8000 ALUMINUM
AWNING WINDOW-LMI

ALUMINA DISTRIBUTION CENTER
15002 N.W. 107 AVENUE, SUITE # 1
HIALEAH GARDENS, FL. 33018
PHONE: (305) 444-1198

REV. NO	DESCRIPTION	DATE	REV. No	DESCRIPTION	DATE
1	OLD 20-002	08/03/20	3		
2			4		

F.P.
DRAWN BY:

08/03/20
DATE:

20-227
DRAWING No.

SHEET 6 OF 34

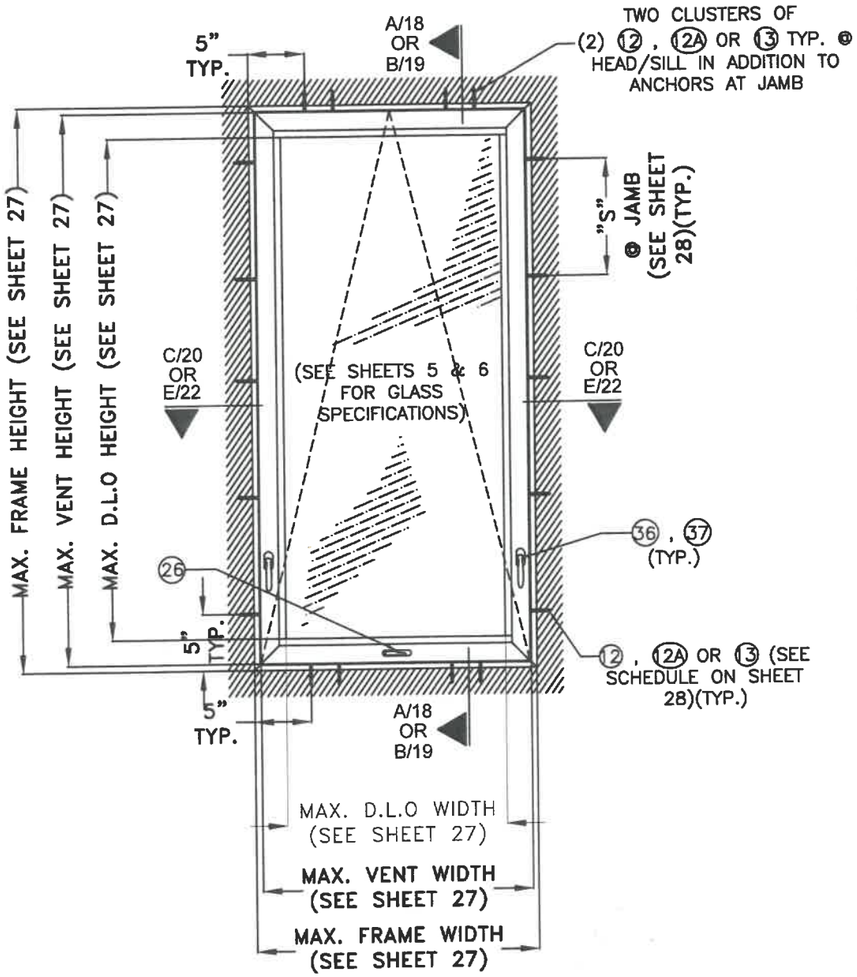

TYPICAL EXTERIOR ELEVATION (VERTICAL ORIENTATION) W/ FRAME HEIGHT UP TO 74" AWNING WINDOW W/ ATTACHED JAMBS*

SCALE: 3/4"=1'-0"

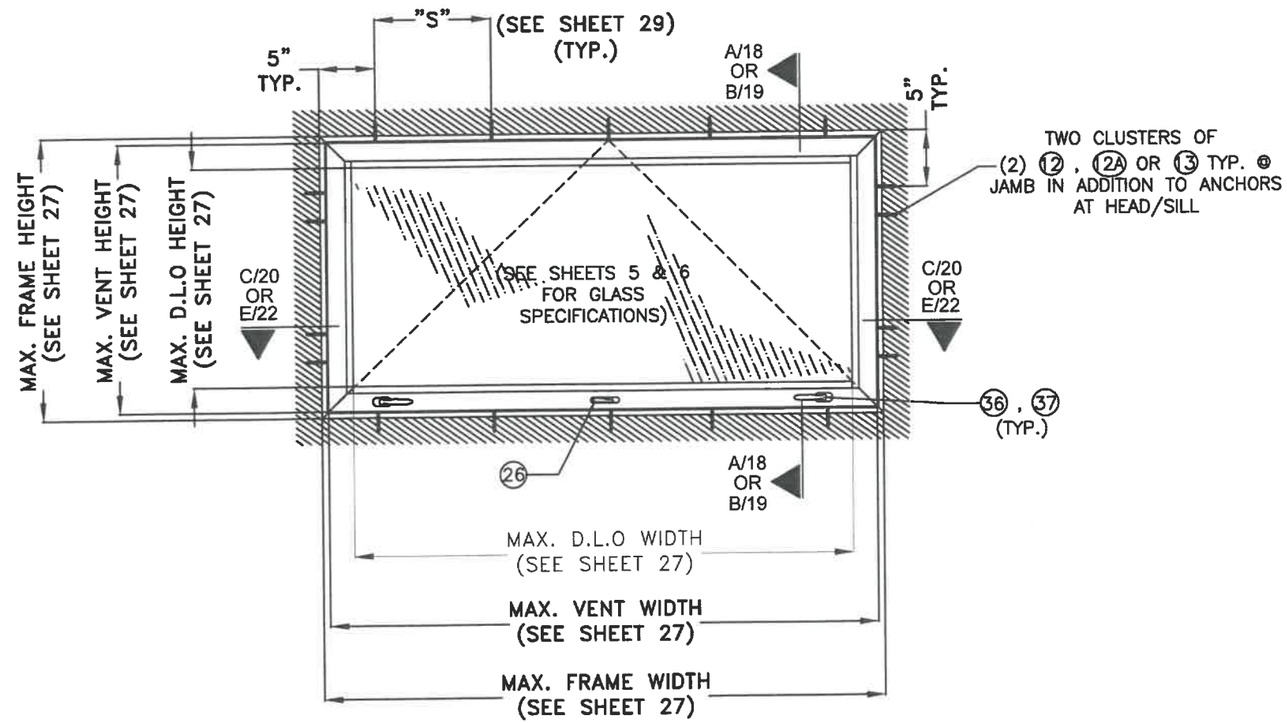

TYPICAL EXTERIOR ELEVATION (HORIZONTAL ORIENTATION) W/ FRAME WIDTH UP TO 74" AWNING WINDOW W/ ATTACHED HEAD/SILL*

SCALE: 3/4"=1'-0"

* NOTE: JAMBS MAY ALSO BE ATTACHED ONLY ON ONE SIDE & FREE STANDING ON THE OTHER SIDE (W/ ADAPTOR # 6) AS PER DETAILS ON SHEETS 7, 8.

WALTER A. TILLIT JR. LICENSE No. 44167 STATE OF FLORIDA PROFESSIONAL ENGINEER

8/17/2020

P.E. SEAL/SIGNATURE/DATE

FLORIDA BUILDING CODE (HIGH & NON HIGH VELOCITY HURRICANE ZONE)

©2020 TILTECO, INC.

TILTECO INC.
TILLIT TESTING & ENGINEERING COMPANY
6355 N.W. 36th. St., Ste. 305, VIRGINIA GARDENS, FL 33166
Phone : (305)871-1530 . Fax : (305)871-1531
CA-0006719
WALTER A. TILLIT Jr. P.E.
FLORIDA Lic. # 44167

SERIES VPF 8000 ALUMINUM AWNING WINDOW-LMI

ALUMINA DISTRIBUTION CENTER
15002 N.W. 107 AVENUE, SUITE # 1
HIALEAH GARDENS, FL. 33018
PHONE: (305) 444-1198

REV. NO	DESCRIPTION	DATE	REV. No	DESCRIPTION	DATE
1	OLD 20-002	08/03/20	3		
2			4		

F.P.
DRAWN BY:

08/03/20
DATE:

20-227
DRAWING No.

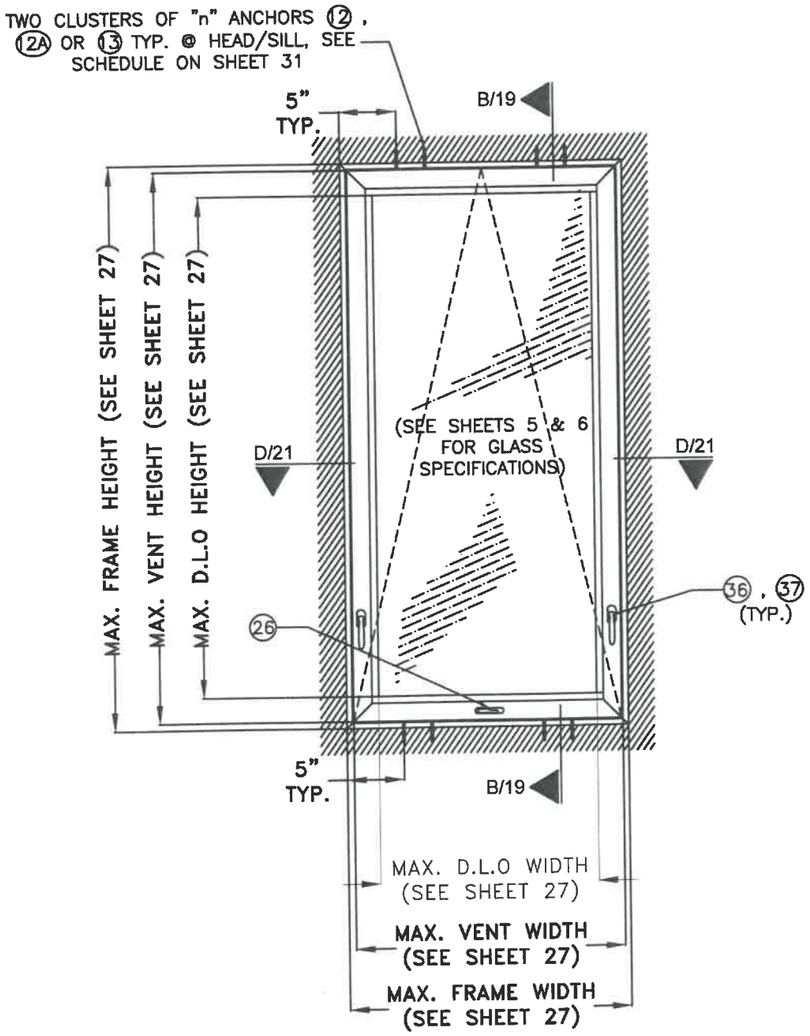

TYPICAL EXTERIOR ELEVATION
(VERTICAL ORIENTATION) W/ FRAME HEIGHT UP TO 74"
AWNING WINDOW W/ NOT ATTACHED JAMBS*

SCALE: 3/4"=1'-0"

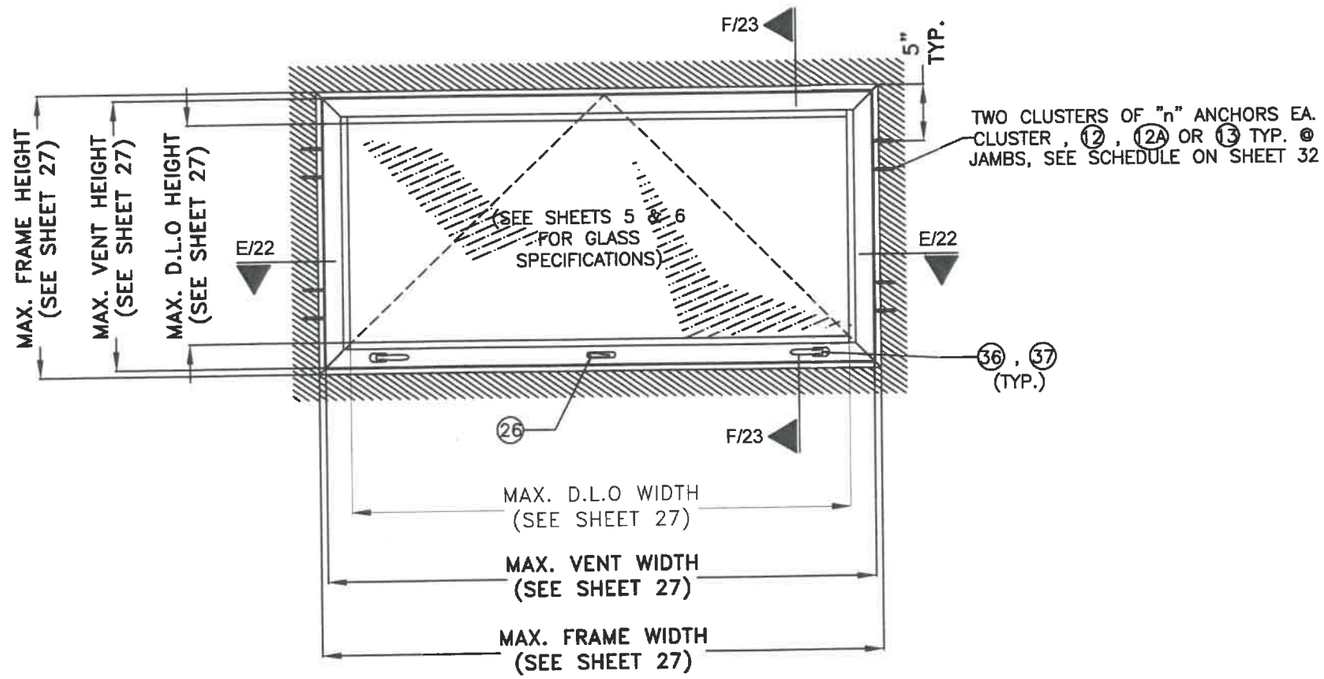

TYPICAL EXTERIOR ELEVATION
(HORIZONTAL ORIENTATION) W/ FRAME WIDTH UP TO 74"
AWNING WINDOW W/ NOT ATTACHED HEAD/SILL*

SCALE: 3/4"=1'-0"

* NOTE: JAMBS MAY ALSO BE ATTACHED ONLY ON ONE SIDE & FREE STANDING ON THE OTHER SIDE (W/ ADAPTOR # 6) AS PER DETAILS ON SHEETS 7, 8.

WALTER A. TILLIT JR. LICENSE No. 44167 STATE OF FLORIDA PROFESSIONAL ENGINEER

P.E. SEAL/SIGNATURE/DATE

FLORIDA BUILDING CODE (HIGH & NON HIGH VELOCITY HURRICANE ZONE)

©2020 TILTECO, INC.

TILTECO INC.
TILLIT TESTING & ENGINEERING COMPANY
6355 N.W. 36th. St., Ste. 305, VIRGINIA GARDENS, FL 33166
Phone : (305)871-1530 , Fax : (305)871-1531
CA-0006719
WALTER A. TILLIT Jr. P.E.
FLORIDA Lic. # 44167

SERIES VPF 8000 ALUMINUM AWNING WINDOW-LMI

ALUMINA DISTRIBUTION CENTER
15002 N.W. 107 AVENUE, SUITE # 1
HIALEAH GARDENS, FL. 33018
PHONE: (305) 444-1198

REV. NO	DESCRIPTION	DATE	REV. No	DESCRIPTION	DATE
1	OLD 20-002	08/03/20	3		
2			4		

F.P.
DRAWN BY:

08/03/20
DATE:

20-227
DRAWING No.

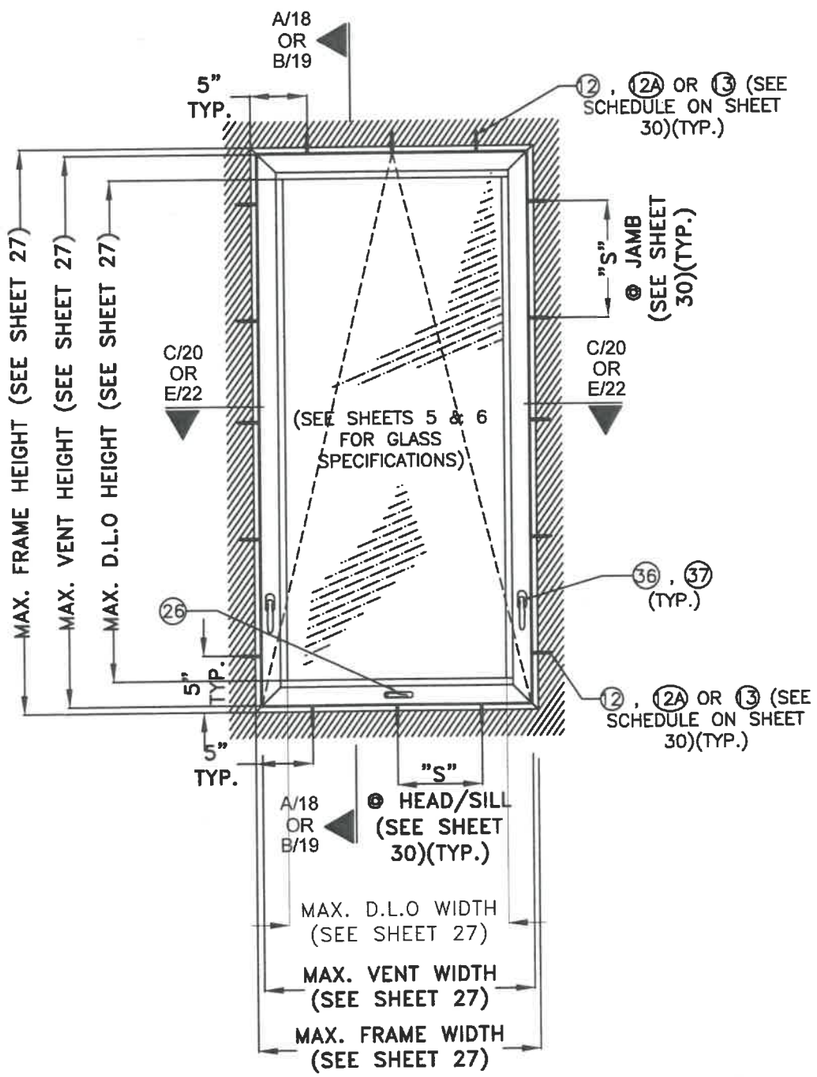

TYPICAL EXTERIOR ELEVATION (VERTICAL ORIENTATION)
W/ FRAME HEIGHT LARGER THAN 74" UP TO 84"
AWNING WINDOW W/ ATTACHED JAMBS*
SCALE: 3/4"=1'-0"

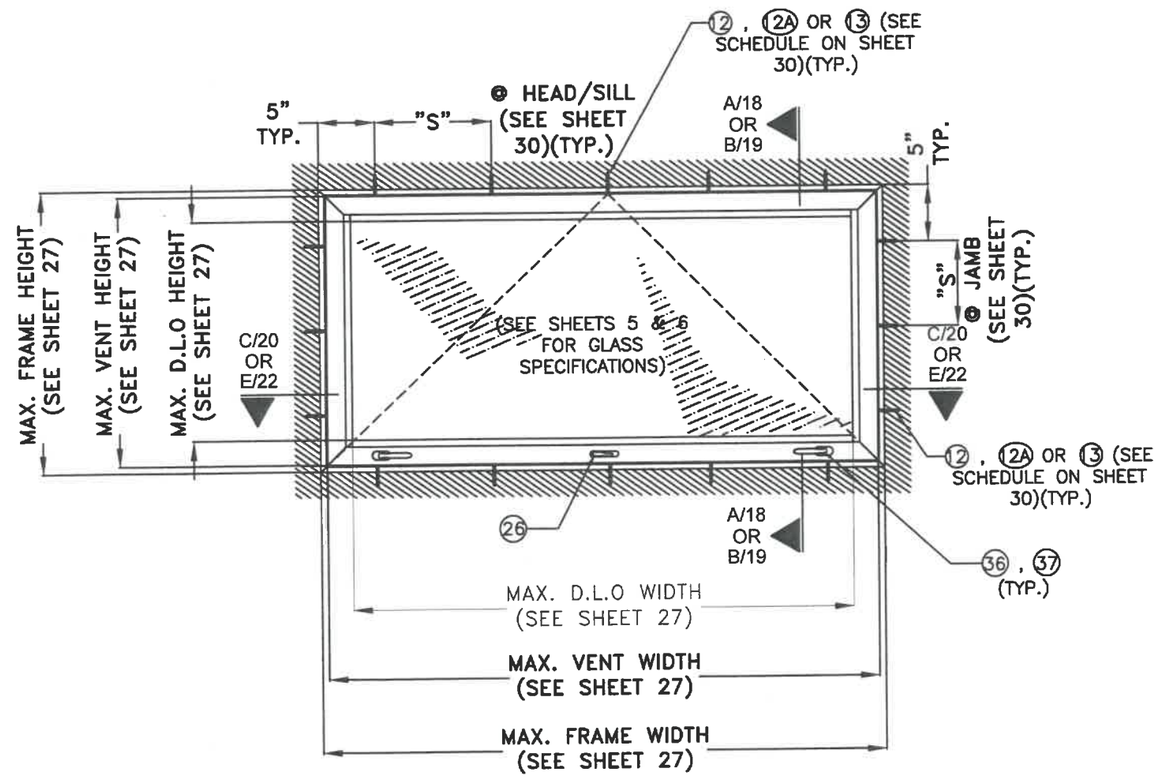

TYPICAL EXTERIOR ELEVATION (HORIZONTAL ORIENTATION)
W/ FRAME WIDTH LARGER THAN 74" UP TO 84"
AWNING WINDOW W/ ATTACHED HEAD/SILL*
SCALE: 3/4"=1'-0"

WALTER A. TILLIT JR.
LICENSE
No. 44167
STATE OF FLORIDA
PROFESSIONAL ENGINEER

P.E. SEAL/SIGNATURE/DATE

FLORIDA BUILDING CODE (HIGH & NON HIGH VELOCITY HURRICANE ZONE)

©2020 TILTECO, INC.

TILTECO INC.
TILLIT TESTING & ENGINEERING COMPANY
6355 N.W. 36th. St., Ste. 305, VIRGINIA GARDENS, Fl. 33166
Phone : (305)871-1530 . Fax : (305)871-1531
CA-0006719
WALTER A. TILLIT Jr. P.E.
FLORIDA Lic. # 44167

SERIES VPF 8000 ALUMINUM
AWNING WINDOW-LMI

ALUMINA DISTRIBUTION CENTER
15002 N.W. 107 AVENUE, SUITE # 1
HIALEAH GARDENS, FL. 33018
PHONE: (305) 444-1198

REV. NO	DESCRIPTION	DATE	REV. No	DESCRIPTION	DATE
1	OLD 20-002	08/03/20	3		
2			4		

F.P.
DRAWN BY:
08/03/20
DATE:
20-227
DRAWING No.
SHEET 9 OF 34

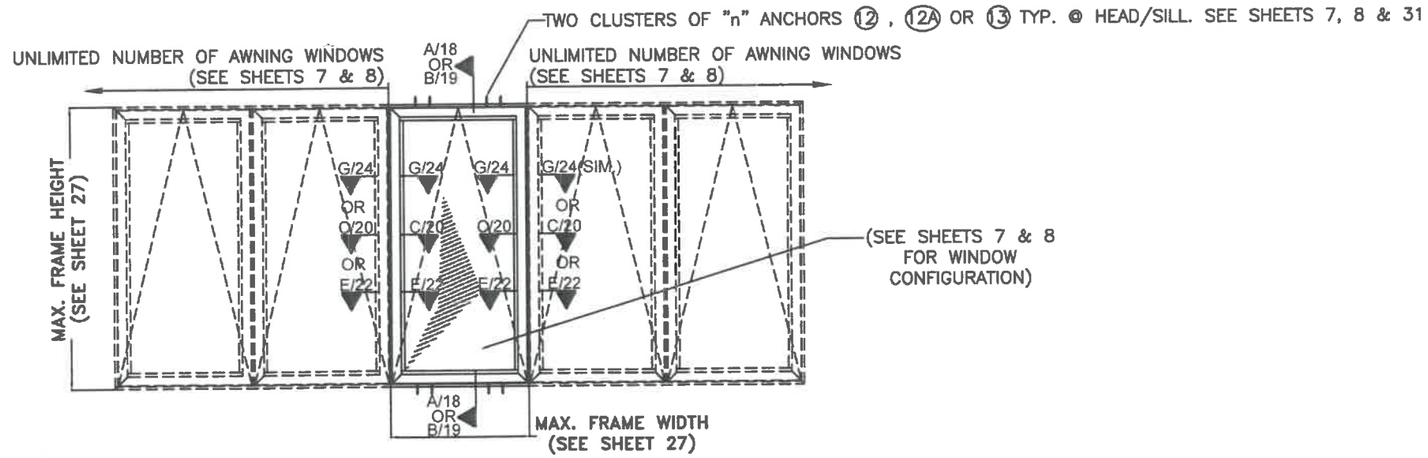

QUALIFIED CONFIGURATIONS FOR VERTICALLY ORIENTED AWNING WINDOW W/ ACCOMPANYING VERTICALLY ORIENTED AWNING WINDOWS TYPICAL EXTERIOR ELEVATIONS

SCALE 3/8"=1'-0"

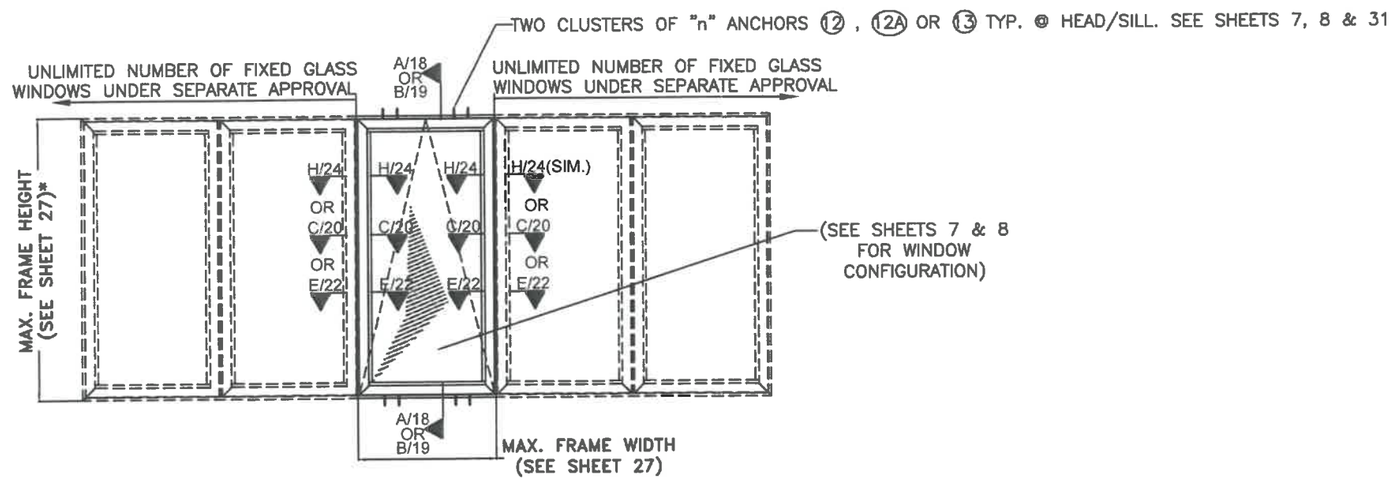

QUALIFIED CONFIGURATIONS FOR VERTICALLY ORIENTED AWNING WINDOW W/ ACCOMPANYING VERTICALLY ORIENTED FIXED WINDOWS (UNDER SEPARATE APPROVAL) TYPICAL EXTERIOR ELEVATION

SCALE 3/8"=1'-0"

* MAX. FRAME HEIGHT & FRAME WIDTH OF ACCOMPANYING FIXED WINDOW SHALL BE AS PER SEPARATE APPROVAL AND THE SHORTEST FRAME HEIGHT OF EITHER WINDOW TYPE SHALL BE USED.

WALTER A. TILLIT JR. LICENSE No. 44167 STATE OF FLORIDA PROFESSIONAL ENGINEER

8/17/20

P.E. SEAL/SIGNATURE/DATE

FLORIDA BUILDING CODE (HIGH & NON HIGH VELOCITY HURRICANE ZONE)

©2020 TILTECO, INC.

TILTECO INC.
TILLIT TESTING & ENGINEERING COMPANY
6655 N.W. 36th. St., Ste. 305, VIRGINIA GARDENS, FL 33166
Phone : (305)871-1530 . Fax : (305)871-1531
CA-0006719
WALTER A. TILLIT Jr. P.E.
FLORIDA Lic. # 44167

SERIES VPF 8000 ALUMINUM AWNING WINDOW-LMI

ALUMINA DISTRIBUTION CENTER
15002 N.W. 107 AVENUE, SUITE # 1
HIALEAH GARDENS, FL. 33018
PHONE: (305) 444-1198

REV. NO	DESCRIPTION	DATE	REV. No	DESCRIPTION	DATE
1	OLD 20-002	08/03/20	3		
2			4		

F.P.
DRAWN BY:

08/03/20
DATE:

20-227
DRAWING No.

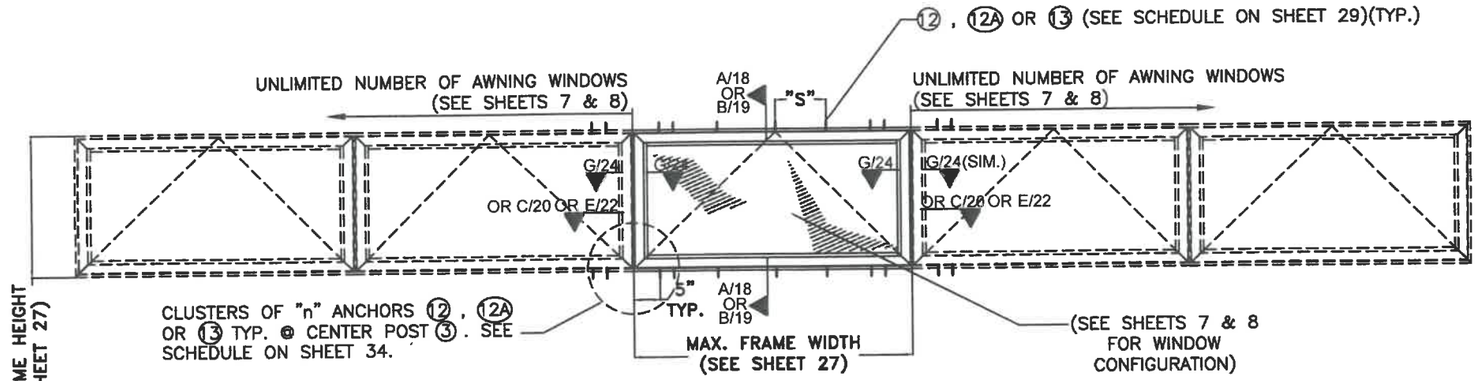

QUALIFIED CONFIGURATIONS FOR HORIZONTALLY ORIENTED AWNING WINDOW W/ ATTACHED HEAD & SILL W/ ACCOMPANYING HORIZONTALLY ORIENTED AWNING WINDOWS TYPICAL EXTERIOR ELEVATIONS

SCALE 3/8"=1'-0"

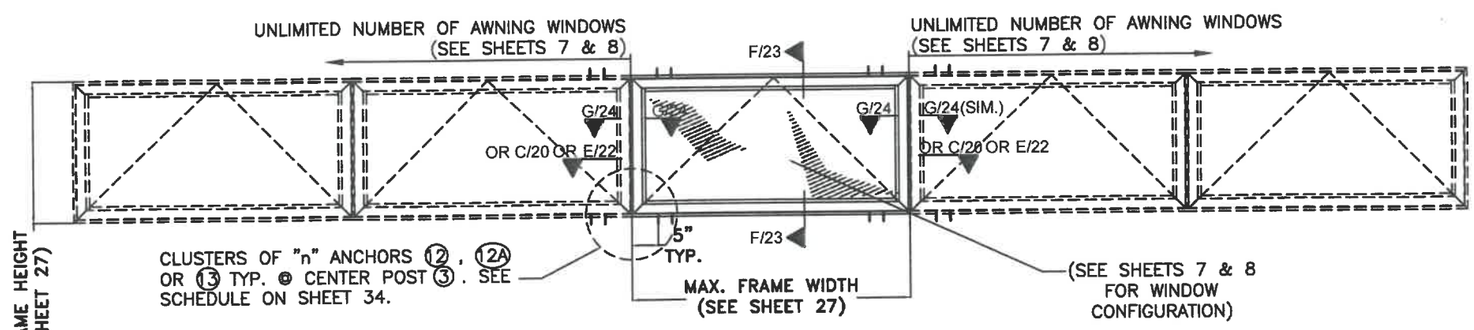

QUALIFIED CONFIGURATIONS FOR HORIZONTALLY ORIENTED AWNING WINDOW W/ NOT ATTACHED HEAD & SILL W/ ACCOMPANYING HORIZONTALLY ORIENTED AWNING WINDOWS TYPICAL EXTERIOR ELEVATIONS

SCALE 3/8"=1'-0"

WALTER A. TILLIT JR. LICENSE No. 44167 STATE OF FLORIDA PROFESSIONAL ENGINEER

7/7/2020

P.E. SEAL/SIGNATURE/DATE

FLORIDA BUILDING CODE (HIGH & NON HIGH VELOCITY HURRICANE ZONE)

©2020 TILTECO, INC.

TILTECO INC.

TILLIT TESTING & ENGINEERING COMPANY
6355 N.W. 36th. St., Ste. 305, VIRGINIA GARDENS, FL 33166
Phone : (305)871-1530 . Fax : (305)871-1531
CA-0006719
WALTER A. TILLIT Jr. P.E.
FLORIDA Lic. # 44167

SERIES VPF 8000 ALUMINUM AWNING WINDOW-LMI

ALUMINA DISTRIBUTION CENTER
15002 N.W. 107 AVENUE, SUITE # 1
HIALEAH GARDENS, FL. 33018
PHONE: (305) 444-1198

REV. NO	DESCRIPTION	DATE	REV. No	DESCRIPTION	DATE
1	OLD 20-002	08/03/20	3		
2			4		

F.P.
DRAWN BY:

08/03/20
DATE:

20-227
DRAWING No.

SHEET 11 OF 34

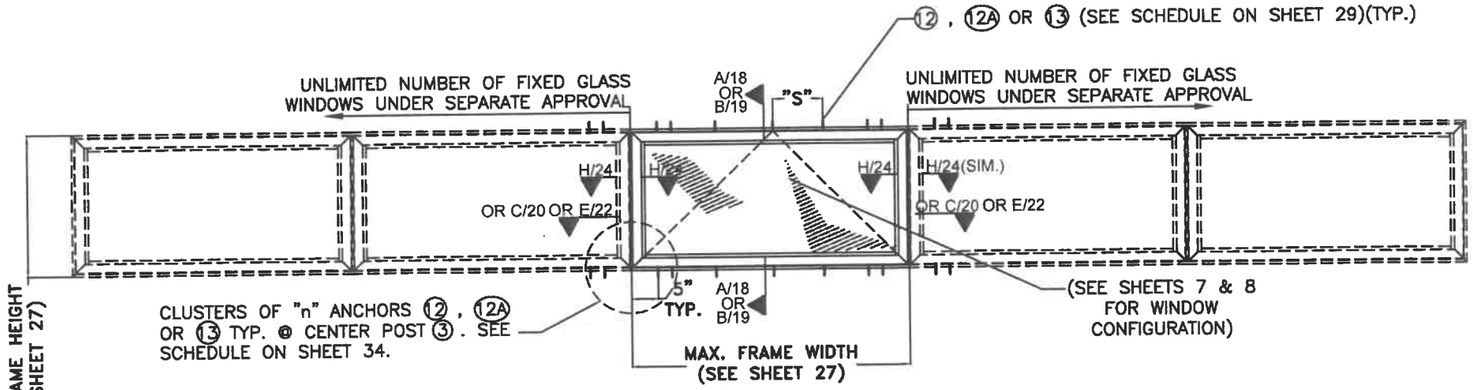

QUALIFIED CONFIGURATIONS FOR HORIZONTALLY ORIENTED AWNING WINDOW W/ ATTACHED HEAD & SILL W/ ACCOMPANYING HORIZONTALLY ORIENTED FIXED WINDOWS (UNDER SEPARATE APPROVAL) TYPICAL EXTERIOR ELEVATIONS

SCALE 3/8"=1'-0"

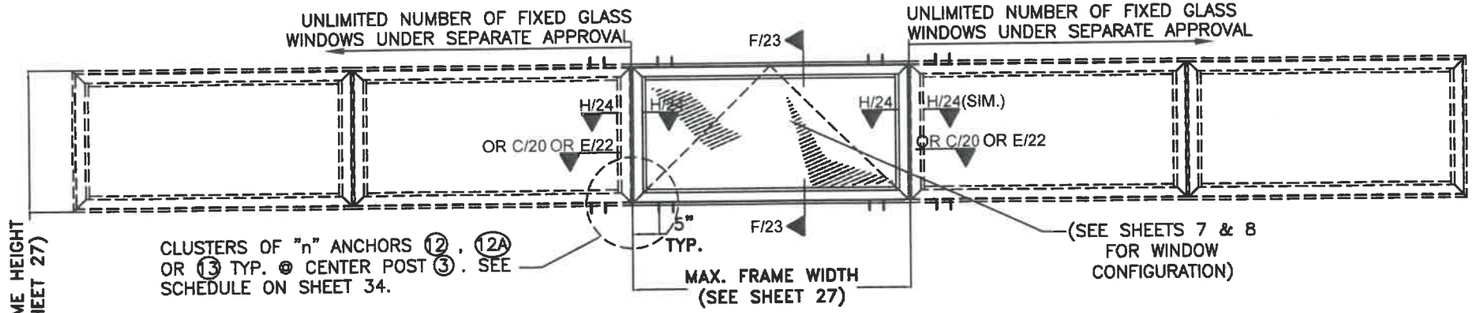

QUALIFIED CONFIGURATIONS FOR HORIZONTALLY ORIENTED AWNING WINDOW W/ NOT ATTACHED HEAD & SILL W/ ACCOMPANYING HORIZONTALLY ORIENTED FIXED WINDOWS (UNDER SEPARATE APPROVAL) TYPICAL EXTERIOR ELEVATIONS

SCALE 3/8"=1'-0"

WALTER A. TILLIT JR. LICENSE No. 44167 STATE OF FLORIDA PROFESSIONAL ENGINEER

P.E. SEAL/SIGNATURE/DATE

FLORIDA BUILDING CODE (HIGH & NON HIGH VELOCITY HURRICANE ZONE)

©2020 TILTECO, INC.

TILTECO INC.
TILLIT TESTING & ENGINEERING COMPANY
6355 N.W. 36th. St., Ste. 305, VIRGINIA GARDENS, FL 33166
Phone : (305)871-1530 . Fax : (305)871-1531
CA-0006719
WALTER A. TILLIT Jr. P.E.
FLORIDA Lic. # 44167

SERIES VPF 8000 ALUMINUM AWNING WINDOW-LMI

ALUMINA DISTRIBUTION CENTER
15002 N.W. 107 AVENUE, SUITE # 1
HIALEAH GARDENS, FL 33018
PHONE: (305) 444-1198

REV. NO	DESCRIPTION	DATE	REV. No	DESCRIPTION	DATE
1	OLD 20-002	08/03/20	3		
2			4		

F.P.
DRAWN BY:

08/03/20
DATE:

20-227
DRAWING No.

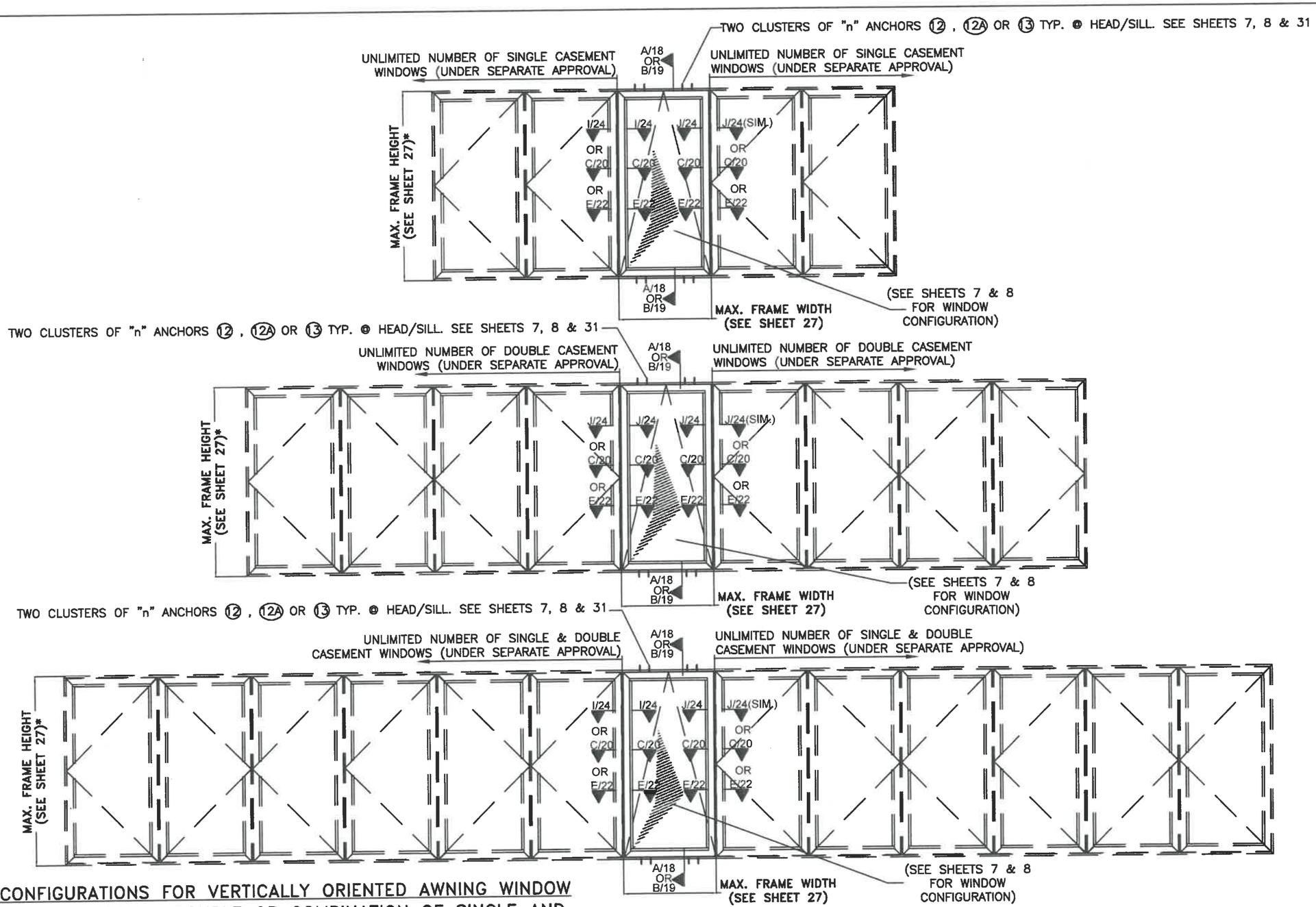

QUALIFIED CONFIGURATIONS FOR VERTICALLY ORIENTED AWNING WINDOW W/ ACCOMPANYING SINGLE, DOUBLE OR COMBINATION OF SINGLE AND DOUBLE CASEMENT WINDOWS (UNDER SEPARATE APPROVAL) TYPICAL EXTERIOR ELEVATIONS

SCALE 3/8"=1'-0"

* MAX. FRAME HEIGHT & FRAME WIDTH OF ACCOMPANYING CASEMENT WINDOWS SHALL BE AS PER SEPARATE APPROVAL AND THE SHORTEST FRAME HEIGHT OF EITHER WINDOW TYPE SHALL BE USED.

WALTER A. TILLIT JR. LICENSE No. 44167 STATE OF FLORIDA PROFESSIONAL ENGINEER

SEAL/SIGNATURE/DATE

FLORIDA BUILDING CODE (HIGH & NON HIGH VELOCITY HURRICANE ZONE)

©2020 TILTECO, INC.

TILTECO INC.
TILLIT TESTING & ENGINEERING COMPANY
6355 N.W. 36th. St., Ste. 305, VIRGINIA GARDENS, FL 33166
Phone : (305)871-1530 . Fax : (305)871-1531
CA-0006719
WALTER A. TILLIT Jr. P.E.
FLORIDA Lic. # 44167

SERIES VPF 8000 ALUMINUM AWNING WINDOW-LMI

ALUMINA DISTRIBUTION CENTER
15002 N.W. 107 AVENUE, SUITE # 1
HIALEAH GARDENS, FL 33018
PHONE: (305) 444-1198

REV. NO	DESCRIPTION	DATE	REV. No	DESCRIPTION	DATE
1	OLD 20-002	08/03/20	3		
2			4		

F.P.
DRAWN BY:

08/03/20
DATE:

20-227
DRAWING No.

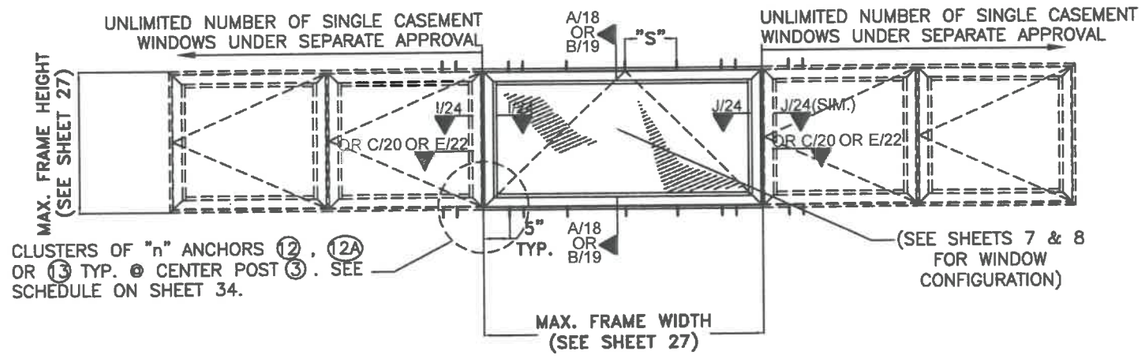

QUALIFIED CONFIGURATIONS FOR HORIZONTALLY ORIENTED AWNING WINDOW W/ ATTACHED HEAD & SILL W/ ACCOMPANYING SINGLE CASEMENT WINDOWS (UNDER SEPARATE APPROVAL) TYPICAL EXTERIOR ELEVATIONS

SCALE 3/8"=1'-0"

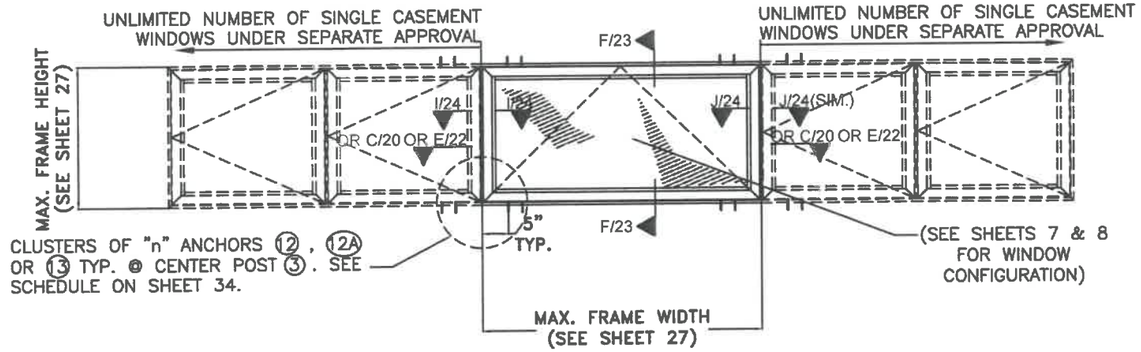

QUALIFIED CONFIGURATIONS FOR HORIZONTALLY ORIENTED AWNING WINDOW W/ NOT ATTACHED HEAD & SILL W/ ACCOMPANYING SINGLE CASEMENT WINDOWS (UNDER SEPARATE APPROVAL) TYPICAL EXTERIOR ELEVATIONS

SCALE 3/8"=1'-0"

WALTER A. TILLIT JR. LICENSE No. 44167 STATE OF FLORIDA PROFESSIONAL ENGINEER

SEAL/SIGNATURE/DATE

FLORIDA BUILDING CODE (HIGH & NON HIGH VELOCITY HURRICANE ZONE)

©2020 TILTECO, INC.

TILTECO INC.

TILLIT TESTING & ENGINEERING COMPANY
6355 N.W. 36th. St., Ste. 305, VIRGINIA GARDENS, FL 33166
Phone : (305)871-1530 . Fax : (305)871-1531
CA-0006719
WALTER A. TILLIT Jr. P.E.
FLORIDA Lic. # 44167

SERIES VPF 8000 ALUMINUM AWNING WINDOW-LMI

ALUMINA DISTRIBUTION CENTER
15002 N.W. 107 AVENUE, SUITE # 1
HIALEAH GARDENS, FL. 33018
PHONE: (305) 444-1198

REV. NO	DESCRIPTION	DATE	REV. No	DESCRIPTION	DATE
1	OLD 20-002	08/03/20	3		
2			4		

F.P.
DRAWN BY:

08/03/20
DATE:

20-227
DRAWING No.

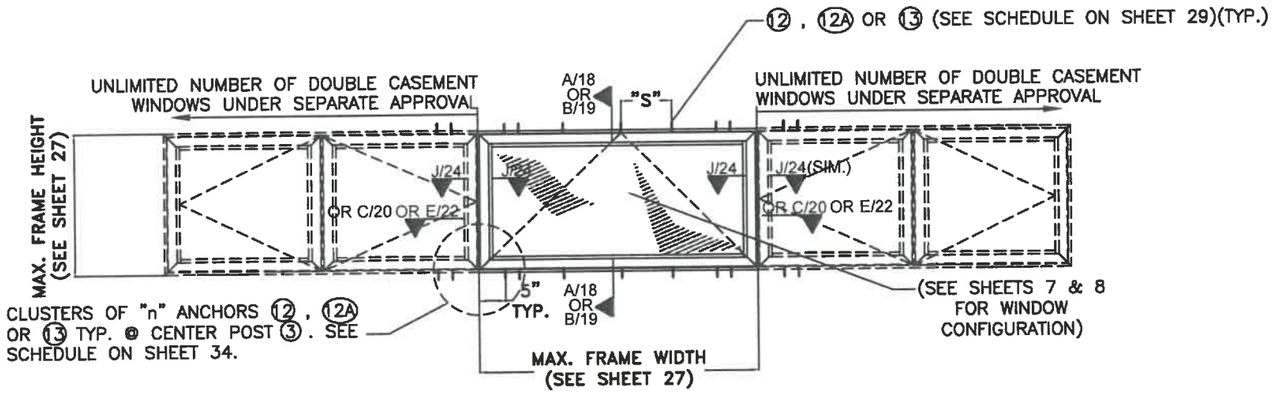

QUALIFIED CONFIGURATIONS FOR HORIZONTALLY ORIENTED AWNING WINDOW W/ ATTACHED HEAD & SILL W/ ACCOMPANYING DOUBLE CASEMENT WINDOWS (UNDER SEPARATE APPROVAL)
TYPICAL EXTERIOR ELEVATIONS
SCALE 3/8"=1'-0"

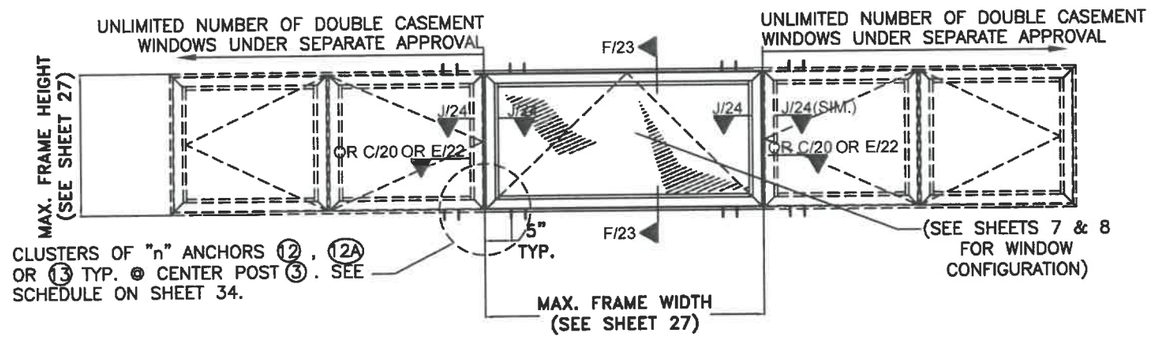

QUALIFIED CONFIGURATIONS FOR HORIZONTALLY ORIENTED AWNING WINDOW W/ NOT ATTACHED HEAD & SILL W/ ACCOMPANYING DOUBLE CASEMENT WINDOWS (UNDER SEPARATE APPROVAL)
TYPICAL EXTERIOR ELEVATIONS
SCALE 3/8"=1'-0"

WALTER A. TILLIT JR. LICENSE No. 44167 STATE OF FLORIDA PROFESSIONAL ENGINEER

SEAL/SIGNATURE/DATE

FLORIDA BUILDING CODE (HIGH & NON HIGH VELOCITY HURRICANE ZONE)

©2020 TILTECO, INC.

TILTECO INC.

TILLIT TESTING & ENGINEERING COMPANY
6355 N.W. 36th. St., Ste. 305, VIRGINIA GARDENS, Fl. 33166
Phone : (305)871-1530 . Fax : (305)871-1531
CA-0006719
WALTER A. TILLIT Jr. P.E.
FLORIDA Lic. # 44167

SERIES VPF 8000 ALUMINUM AWNING WINDOW-LMI

ALUMINA DISTRIBUTION CENTER
15002 N.W. 107 AVENUE, SUITE # 1
HIALEAH GARDENS, FL. 33018
PHONE: (305) 444-1198

REV. NO	DESCRIPTION	DATE	REV. No	DESCRIPTION	DATE
1	OLD 20-002	08/03/20	3		
2			4		

F.P.
DRAWN BY:

08/03/20
DATE:

20-227
DRAWING No.

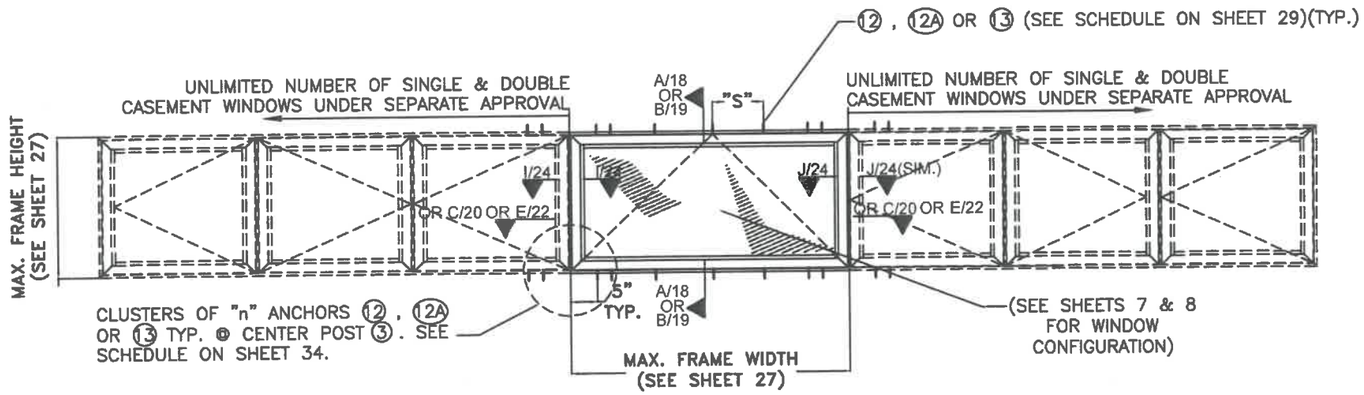

QUALIFIED CONFIGURATIONS FOR HORIZONTALLY ORIENTED AWNING WINDOW W/ ATTACHED HEAD & SILL W/ ACCOMPANYING SINGLE & DOUBLE CASEMENT WINDOWS (UNDER SEPARATE APPROVAL)
TYPICAL EXTERIOR ELEVATIONS
SCALE 3/8"=1'-0"

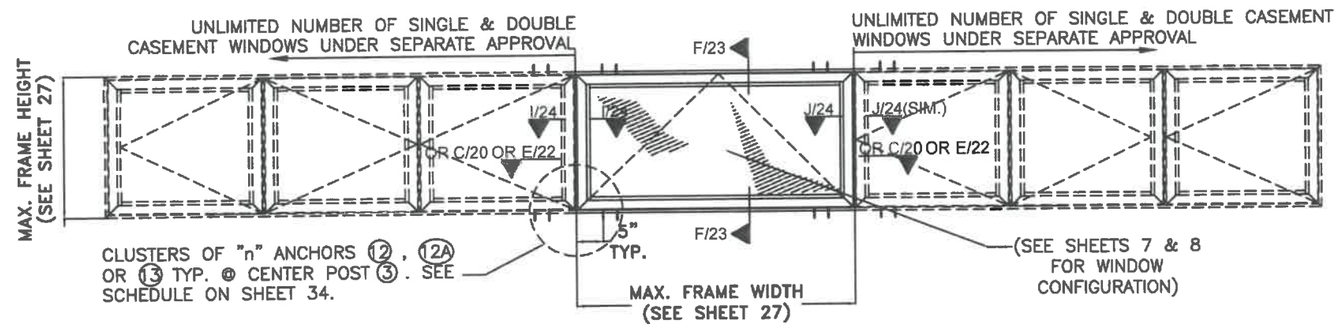

QUALIFIED CONFIGURATIONS FOR HORIZONTALLY ORIENTED AWNING WINDOW W/ NOT ATTACHED HEAD & SILL W/ ACCOMPANYING SINGLE & DOUBLE CASEMENT WINDOWS (UNDER SEPARATE APPROVAL)
TYPICAL EXTERIOR ELEVATIONS
SCALE 3/8"=1'-0"

WALTER A. TILLIT JR. LICENSE No. 44167 STATE OF FLORIDA PROFESSIONAL ENGINEER
P.E. SEAL/SIGNATURE/DATE

FLORIDA BUILDING CODE (HIGH & NON HIGH VELOCITY HURRICANE ZONE)

©2020 TILTECO, INC.

TILTECO INC.
TILLIT TESTING & ENGINEERING COMPANY
6355 N.W. 36th. St., Ste. 305, VIRGINIA GARDENS, FL 33166
Phone : (305)871-1530 . Fax : (305)871-1531
CA-0006719
WALTER A. TILLIT Jr. P.E.
FLORIDA Lic. # 44167

SERIES VPF 8000 ALUMINUM AWNING WINDOW-LMI

ALUMINA DISTRIBUTION CENTER
15002 N.W. 107 AVENUE, SUITE # 1
HIALEAH GARDENS, FL. 33018
PHONE: (305) 444-1198

REV. NO	DESCRIPTION	DATE	REV. No	DESCRIPTION	DATE
1	OLD 20-002	08/03/20	3		
2			4		

F.P.
DRAWN BY:
08/03/20
DATE:
20-227
DRAWING No.
SHEET 16 OF 34

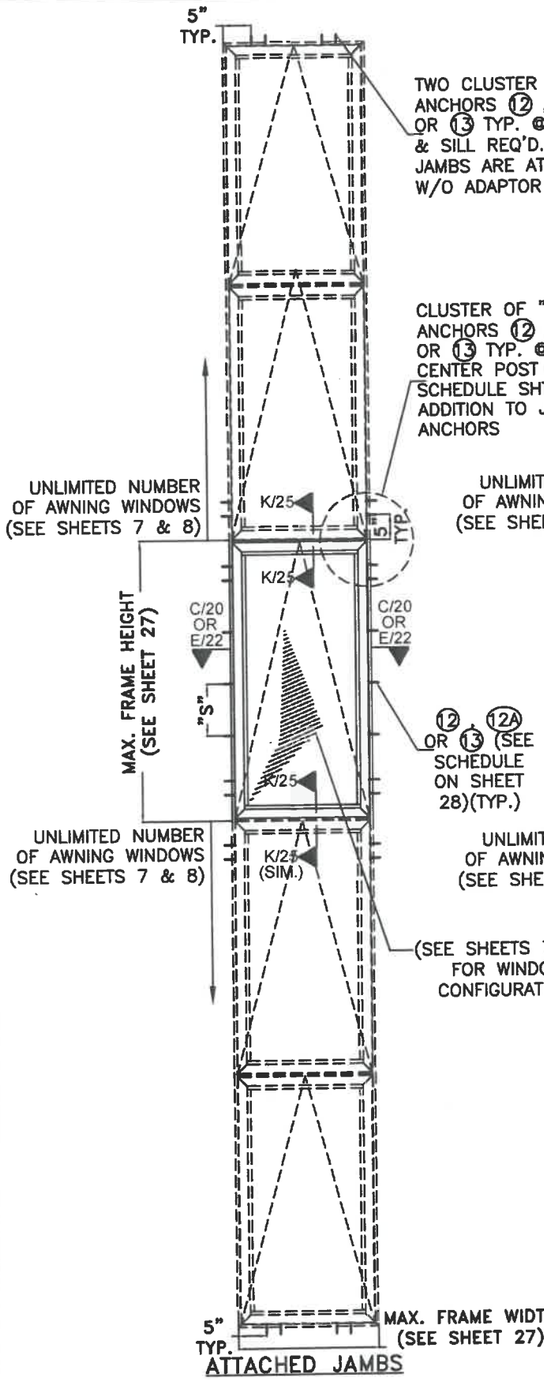

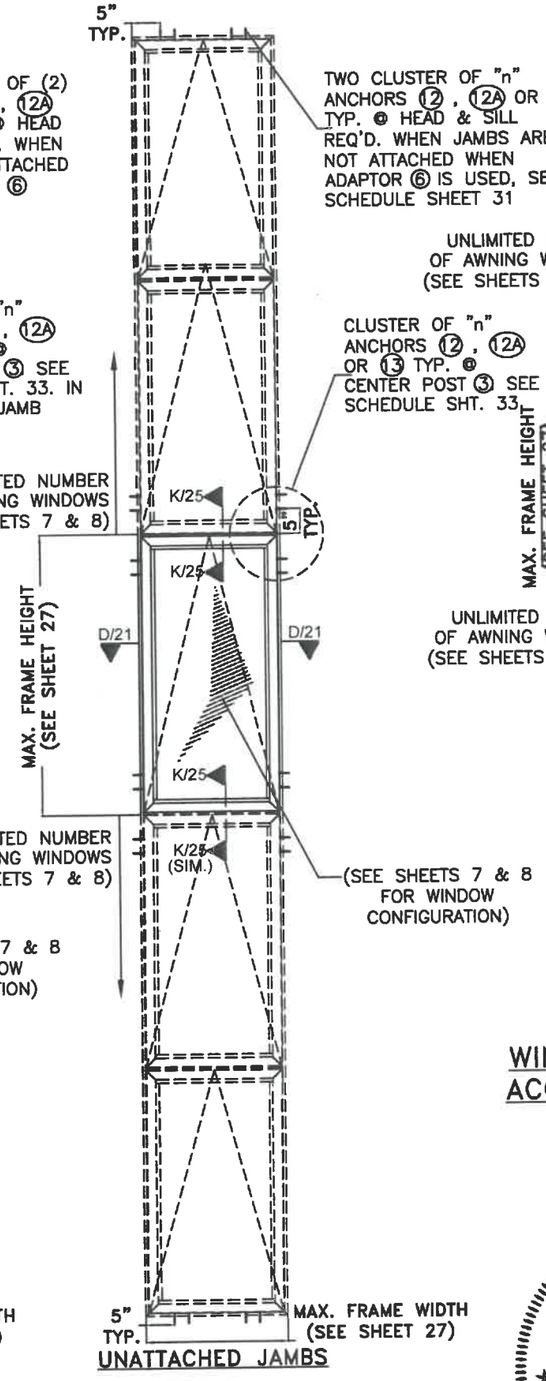

QUALIFIED CONFIGURATIONS FOR VERTICALLY ORIENTED AWNING WINDOW W/ COMBINATION OF VERTICAL ACCOMPANYING VERTICALLY ORIENTED AWNING WINDOWS
TYPICAL EXTERIOR ELEVATION
SCALE 3/8"=1'-0"

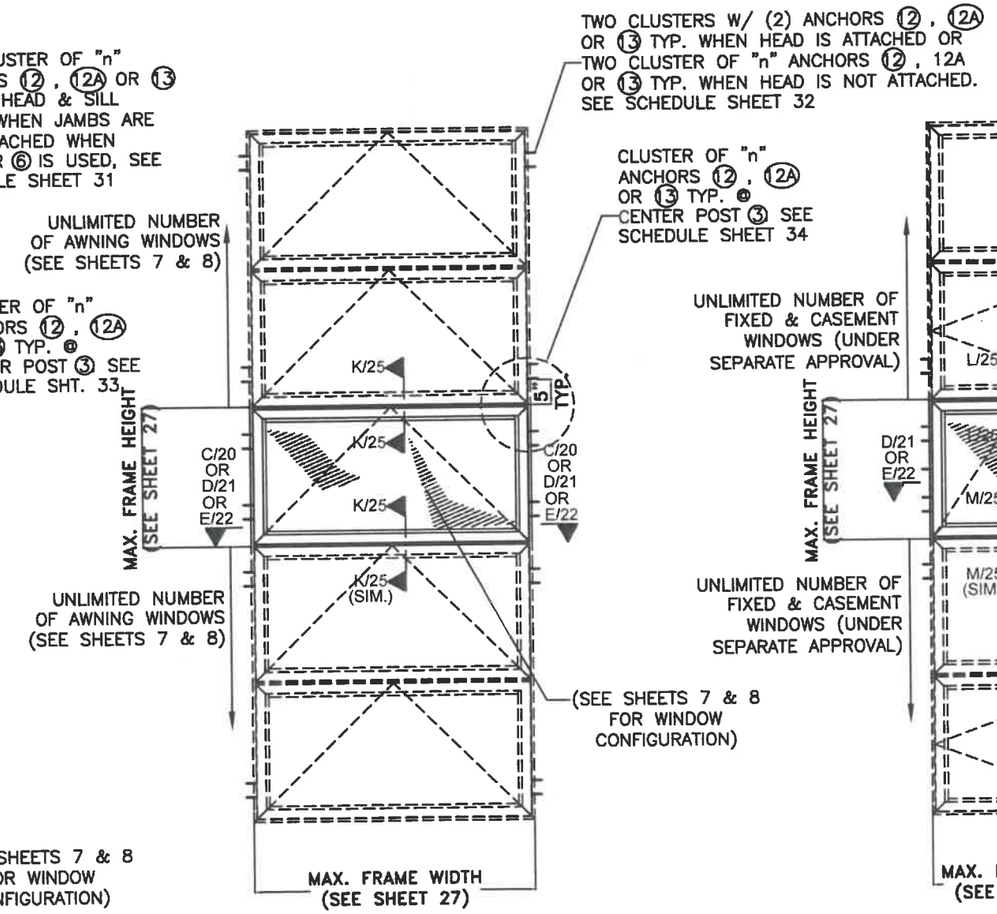

QUALIFIED CONFIGURATIONS FOR HORIZONTALLY ORIENTED AWNING WINDOW W/ COMBINATION OF VERTICAL ACCOMPANYING HORIZONTALLY ORIENTED AWNING WINDOWS
TYPICAL EXTERIOR ELEVATION
SCALE 3/8"=1'-0"

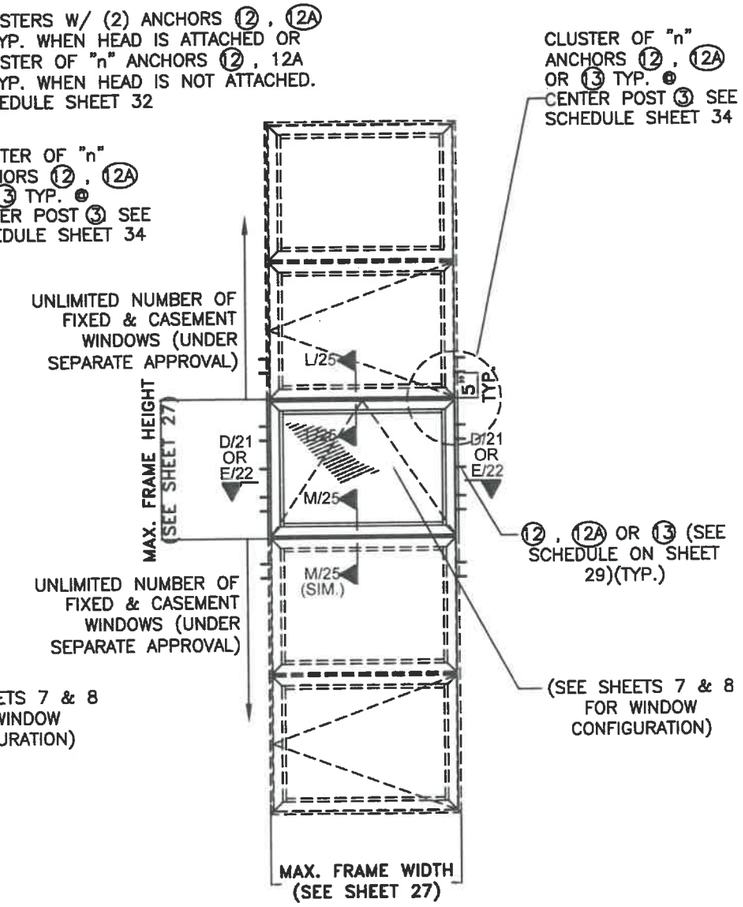

QUALIFIED CONFIGURATIONS FOR HORIZONTALLY ORIENTED AWNING WINDOW W/ COMBINATION OF VERTICAL ACCOMPANYING FIXED & CASEMENT WINDOWS (UNDER SEPARATE APPROVAL)
TYPICAL EXTERIOR ELEVATION
SCALE 3/8"=1'-0"

WALTER A. TILLIT JR. LICENSE No. 44167 STATE OF FLORIDA PROFESSIONAL ENGINEER

P.E. SEAL/SIGNATURE/DATE

FLORIDA BUILDING CODE (HIGH & NON HIGH VELOCITY HURRICANE ZONE)

©2020 TILTECO, INC.

TILTECO INC.
TILLIT TESTING & ENGINEERING COMPANY
6355 N.W. 36th. St., Ste. 305, VIRGINIA GARDENS, FL 33166
Phone : (305)871-1530 . Fax : (305)871-1531
CA-0006719
WALTER A. TILLIT Jr. P.E.
FLORIDA Lic. # 44167

SERIES VPF 8000 ALUMINUM AWNING WINDOW-LMI

ALUMINA DISTRIBUTION CENTER
15002 N.W. 107 AVENUE, SUITE # 1
HIALEAH GARDENS, FL 33018
PHONE: (305) 444-1198

REV. NO	DESCRIPTION	DATE	REV. No	DESCRIPTION	DATE
1	OLD 20-002	08/03/20	3		
2			4		

F.P.
DRAWN BY:
08/03/20
DATE:
20-227
DRAWING No.
SHEET 17 OF 34

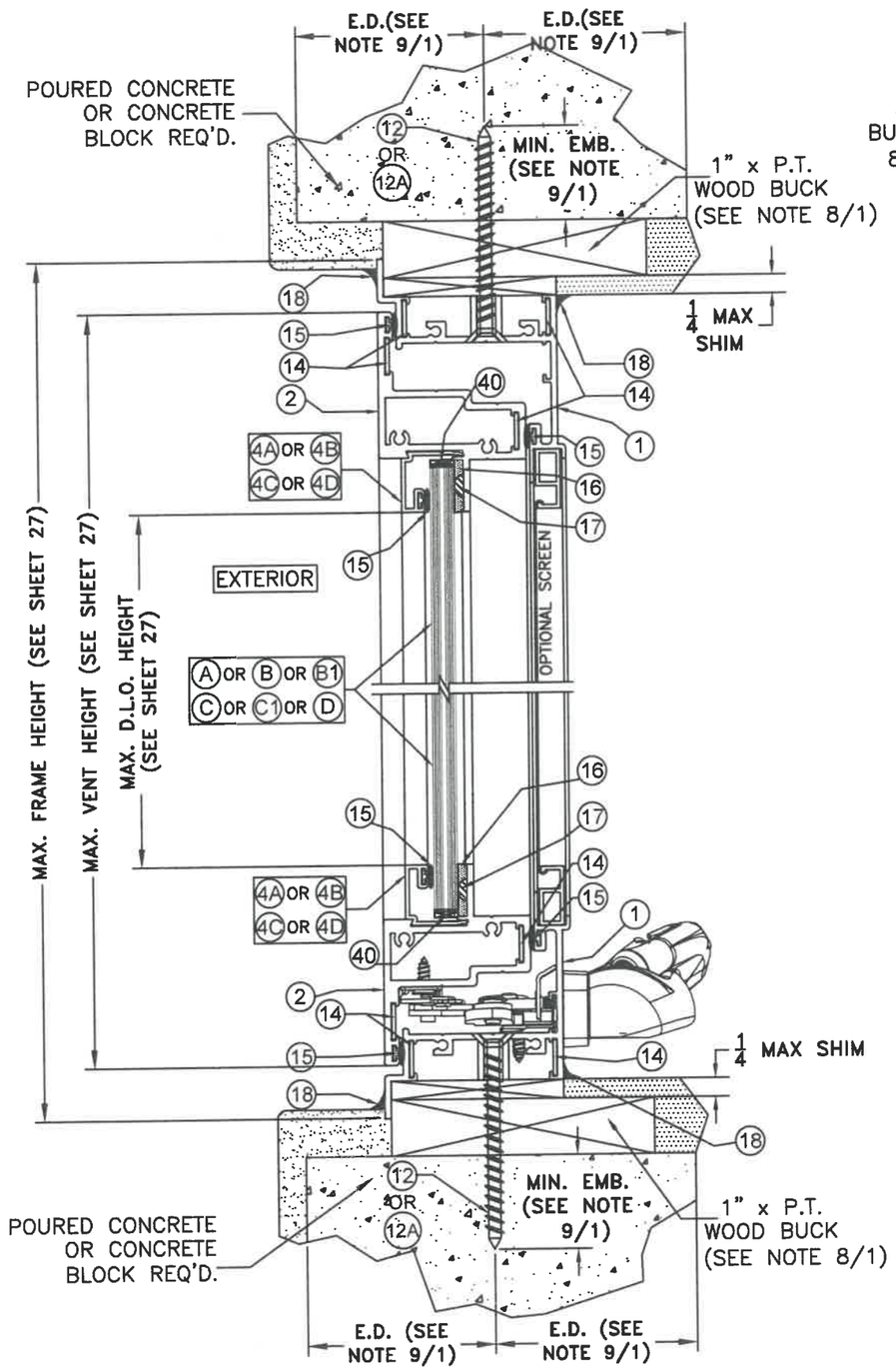

POURED CONCRETE/ CONCRETE BLOCK SUBSTRATE

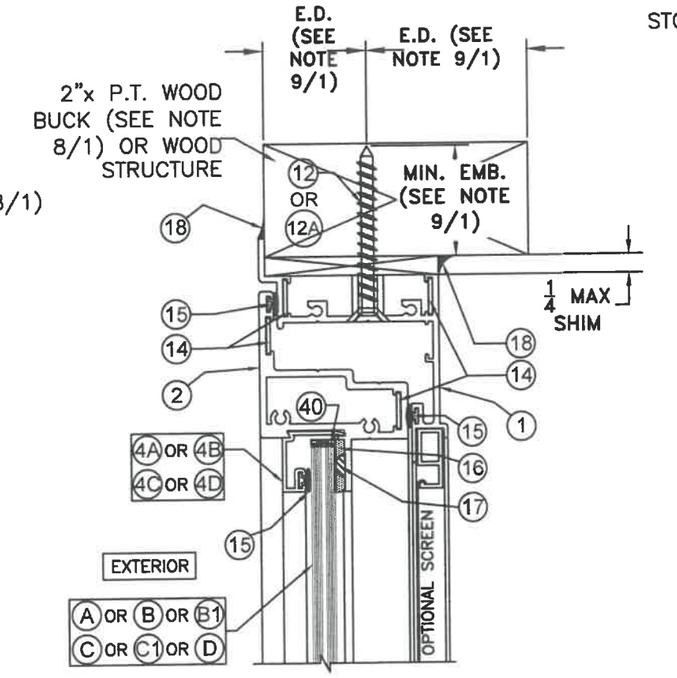

WOOD SUBSTRATE

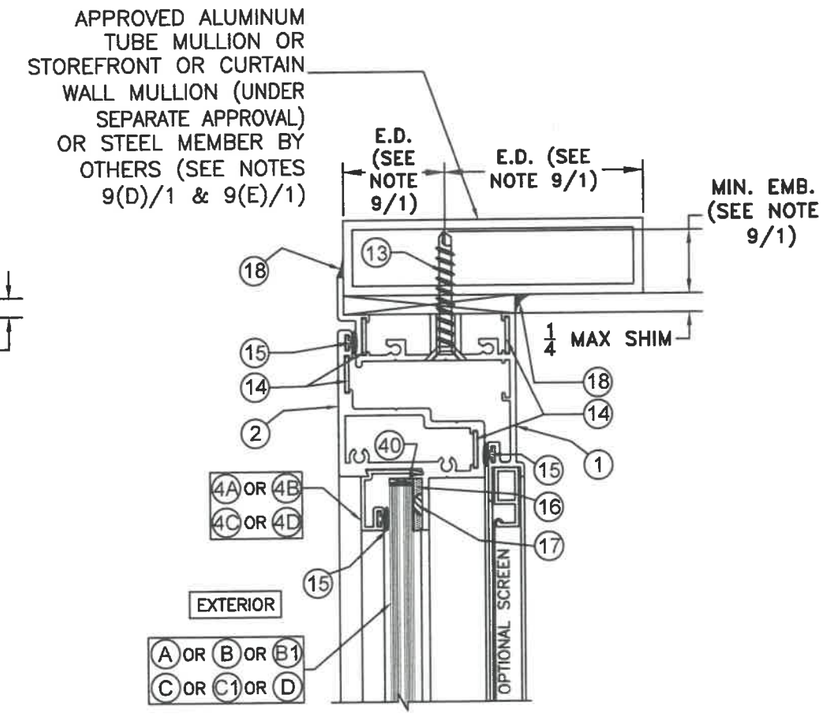

ALUMINUM MULLION OR STEEL MEMBER SUBSTRATE

SECTION A–A

SCALE 1/2"=1"

FOR HARDWARE SEE SHEETS 3 & 3A.

WALTER A. TILLIT JR. LICENSE No. 44167 STATE OF FLORIDA PROFESSIONAL ENGINEER

P.E. SEAL/SIGNATURE/DATE

FLORIDA BUILDING CODE (HIGH & NON HIGH VELOCITY HURRICANE ZONE)

©2020 TILTECO, INC.

TILTECO INC.

TILLIT TESTING & ENGINEERING COMPANY
6355 N.W. 36th. St., Ste. 305, VIRGINIA GARDENS, FL 33166
Phone : (305)871-1530 . Fax : (305)871-1531
CA-0006719
WALTER A. TILLIT Jr. P.E.
FLORIDA Lic. # 44167

SERIES VPF 8000 ALUMINUM AWNING WINDOW-LMI

ALUMINA DISTRIBUTION CENTER
15002 N.W. 107 AVENUE, SUITE # 1
HIALEAH GARDENS, FL. 33018
PHONE: (305) 444-1198

REV. NO	DESCRIPTION	DATE	REV. No	DESCRIPTION	DATE
1	OLD 20-002	08/03/20	3		
2			4		

F.P.
DRAWN BY:

08/03/20
DATE:

20-227
DRAWING No.

SHEET 18 OF 34

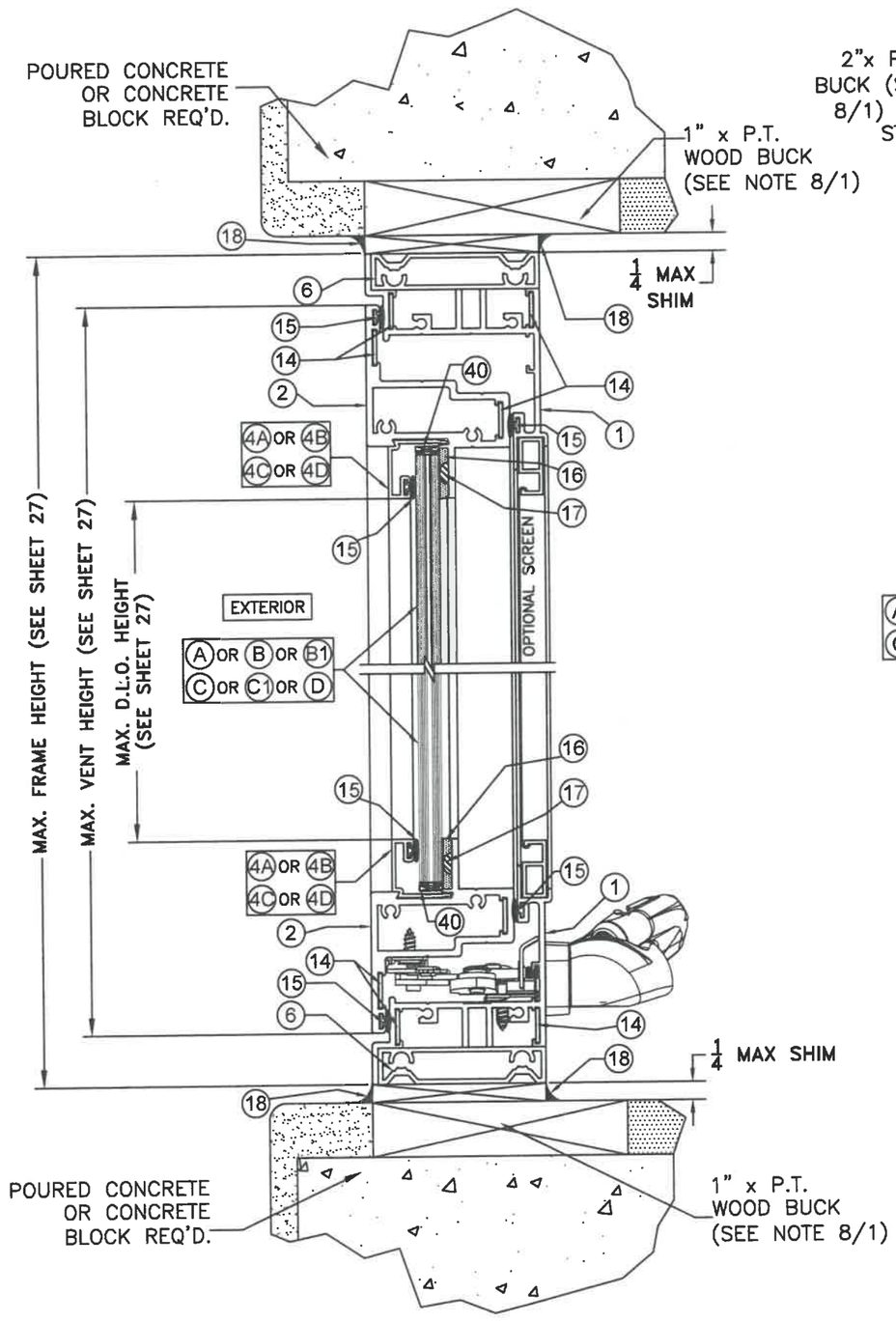

POURED CONCRETE/ CONCRETE BLOCK SUBSTRATE

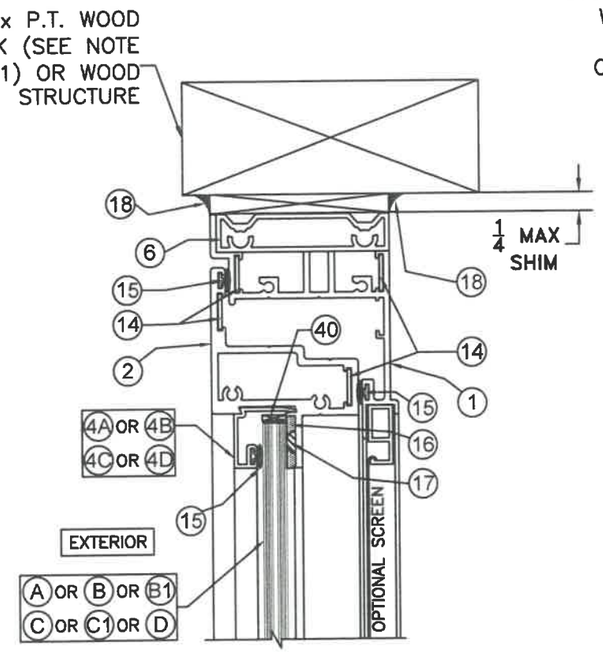

WOOD SUBSTRATE

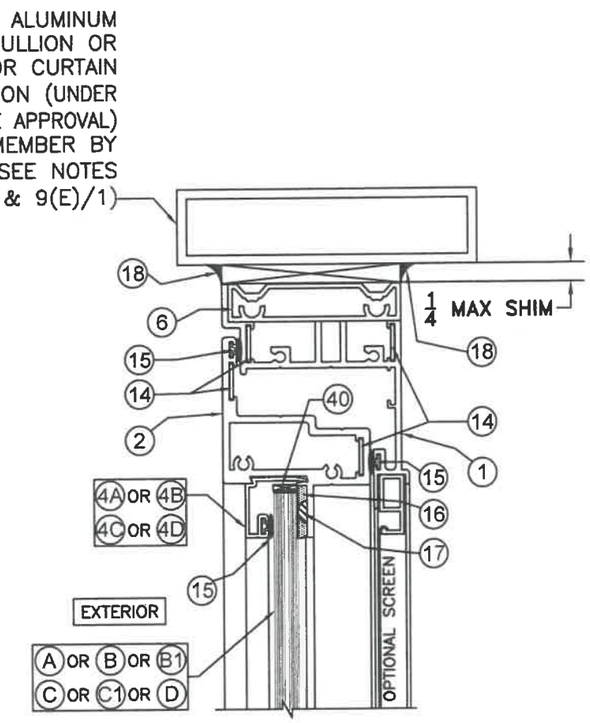

ALUMINUM MULLION OR STEEL MEMBER SUBSTRATE

SECTION B–B

SCALE 1/2"=1"

FOR HARDWARE SEE SHEETS 3 & 3A.

WALTER A. TILLIT JR. LICENSE No. 44167 STATE OF FLORIDA PROFESSIONAL ENGINEER

P.E. SEAL/SIGNATURE/DATE

FLORIDA BUILDING CODE (HIGH & NON HIGH VELOCITY HURRICANE ZONE)

©2020 TILTECO, INC.

TILTECO INC.

TILLIT TESTING & ENGINEERING COMPANY
6355 N.W. 36th. St., Ste. 305, VIRGINIA GARDENS, FL 33166
Phone : (305)871–1530 . Fax : (305)871–1531
CA–0006719
WALTER A. TILLIT Jr. P.E.
FLORIDA Lic. # 44167

SERIES VPF 8000 ALUMINUM AWNING WINDOW–LMI

ALUMINA DISTRIBUTION CENTER
15002 N.W. 107 AVENUE, SUITE # 1
HIALEAH GARDENS, FL. 33018
PHONE: (305) 444–1198

REV. NO	DESCRIPTION	DATE	REV. No	DESCRIPTION	DATE
1	OLD 20–002	08/03/20	3		
2			4		

F.P.
DRAWN BY:

08/03/20
DATE:

20–227
DRAWING No.

SHEET 19 OF 34

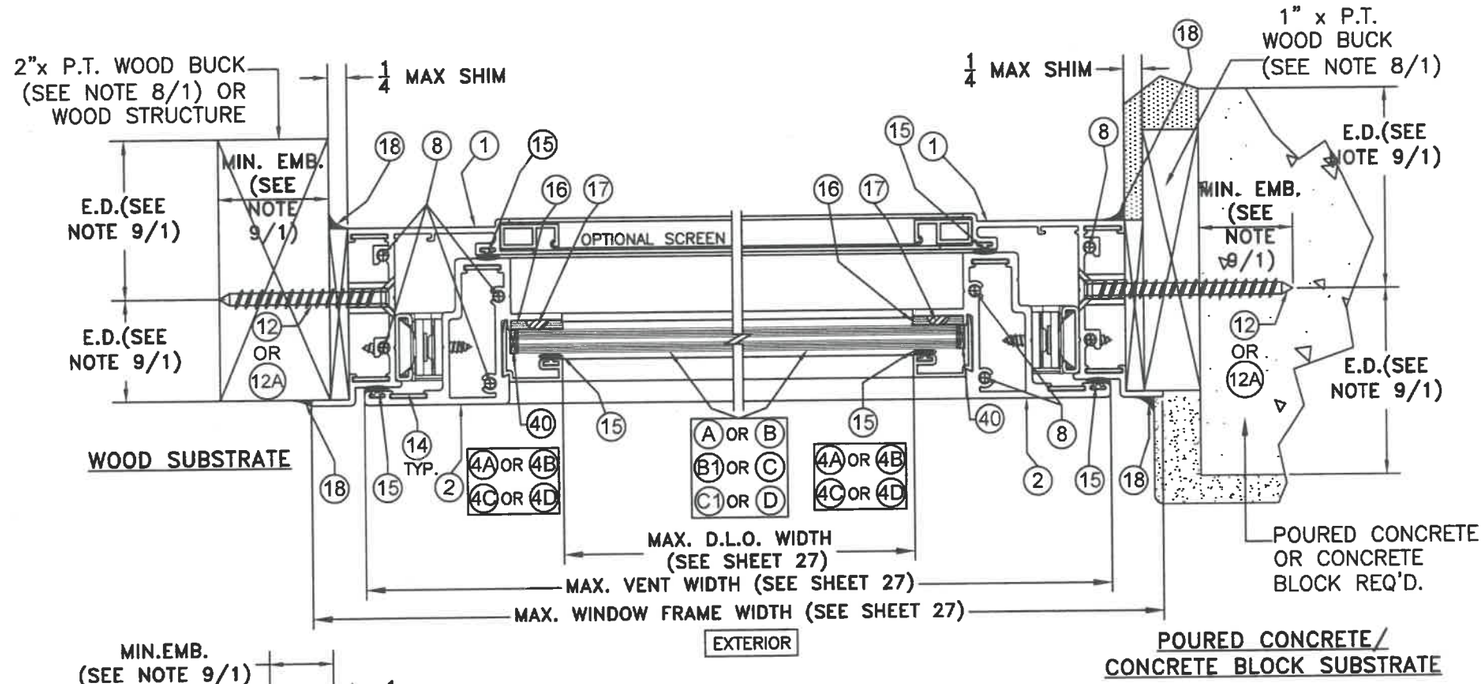

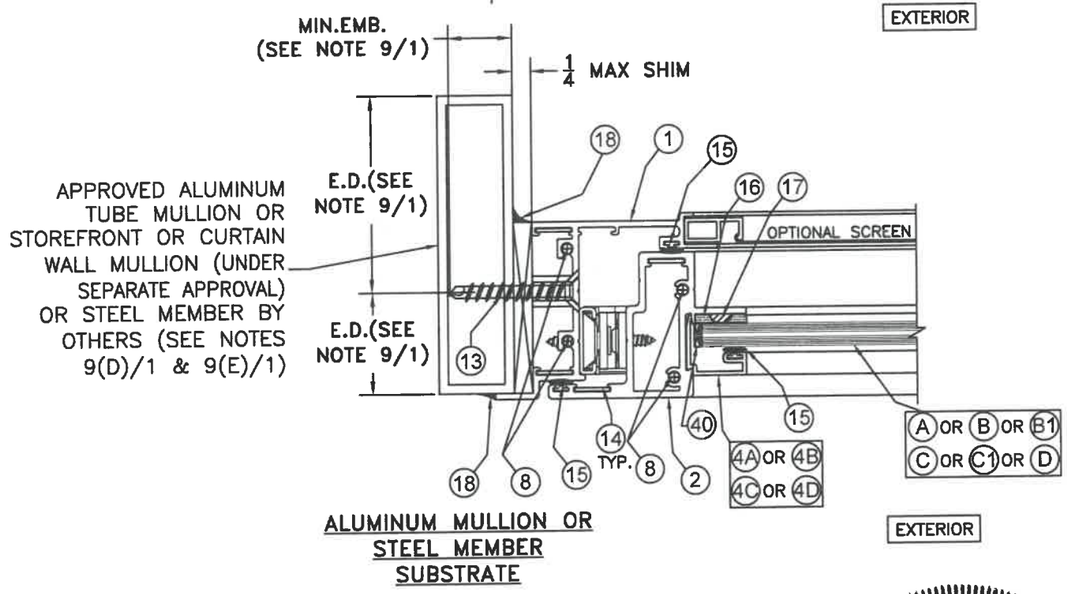

SECTION C–C

SCALE 1/2"=1"

FOR HARDWARE SEE SHEETS 3 & 3A.

WALTER A. TILLIT JR. LICENSE No. 44167 STATE OF FLORIDA PROFESSIONAL ENGINEER

P.E. SEAL/SIGNATURE/DATE

FLORIDA BUILDING CODE (HIGH & NON HIGH VELOCITY HURRICANE ZONE)

©2020 TILTECO, INC.

TILTECO INC.

TILLIT TESTING & ENGINEERING COMPANY
6355 N.W. 36th. St., Ste. 305, VIRGINIA GARDENS, FL 33166
Phone : (305)871-1530 . Fax : (305)871-1531
CA-0006719
WALTER A. TILLIT Jr. P.E.
FLORIDA Lic. # 44167

SERIES VPF 8000 ALUMINUM AWNING WINDOW-LMI

ALUMINA DISTRIBUTION CENTER
15002 N.W. 107 AVENUE, SUITE # 1
HIALEAH GARDENS, FL. 33018
PHONE: (305) 444-1198

REV. NO	DESCRIPTION	DATE	REV. No	DESCRIPTION	DATE
1	OLD 20-002	08/03/20	3		
2			4		

F.P.
DRAWN BY:

08/03/20
DATE:

20-227
DRAWING No.

SHEET 20 OF 34

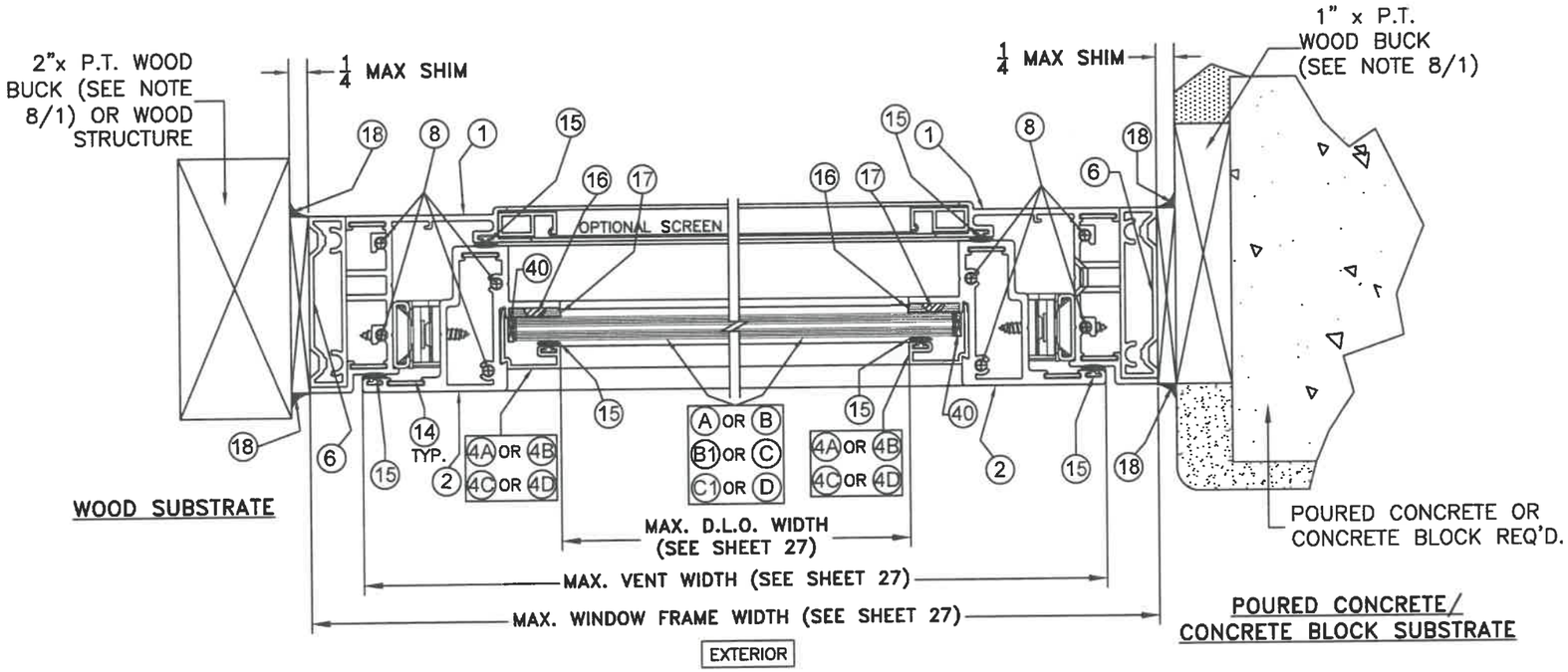

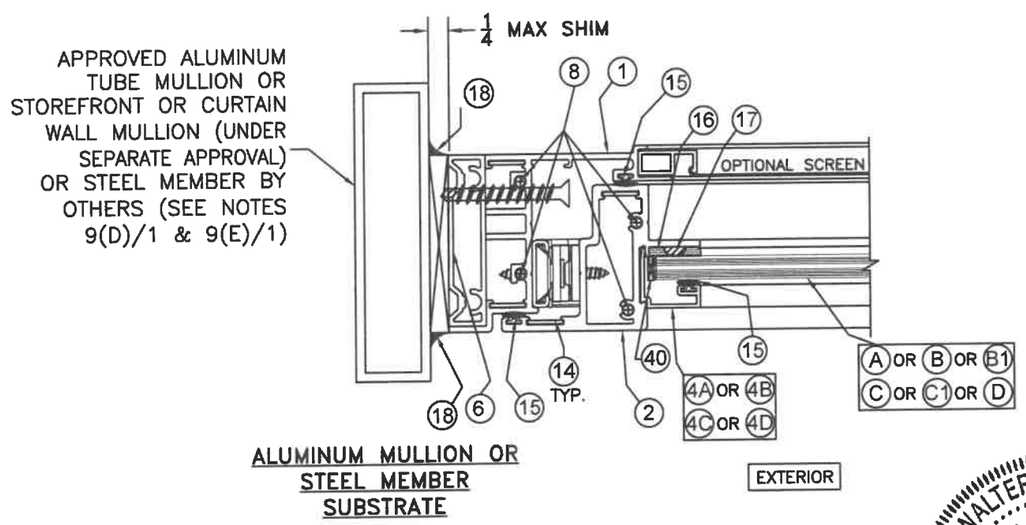

SECTION D–D

SCALE 1/2"=1"

FOR HARDWARE SEE SHEETS 3 & 3A.

WALTER A. TILLIT JR. LICENSE No. 44167 STATE OF FLORIDA PROFESSIONAL ENGINEER

P.E. SEAL/SIGNATURE/DATE

FLORIDA BUILDING CODE (HIGH & NON HIGH VELOCITY HURRICANE ZONE)

©2020 TILTECO, INC.

TILTECO INC.

TILLIT TESTING & ENGINEERING COMPANY
6355 N.W. 36th. St., Ste. 305, VIRGINIA GARDENS, FL 33166
Phone : (305)871-1530 . Fax : (305)871-1531
CA-0006719
WALTER A. TILLIT Jr. P.E.
FLORIDA Lic. # 44167

SERIES VPF 8000 ALUMINUM AWNING WINDOW-LMI

ALUMINA DISTRIBUTION CENTER
15002 N.W. 107 AVENUE, SUITE # 1
HIALEAH GARDENS, FL 33018
PHONE: (305) 444-1198

REV. NO	DESCRIPTION	DATE	REV. No	DESCRIPTION	DATE
1	OLD 20-002	08/03/20	3		
2			4		

F.P.
DRAWN BY:

08/03/20
DATE:

20-227
DRAWING No.

SHEET 21 OF 34

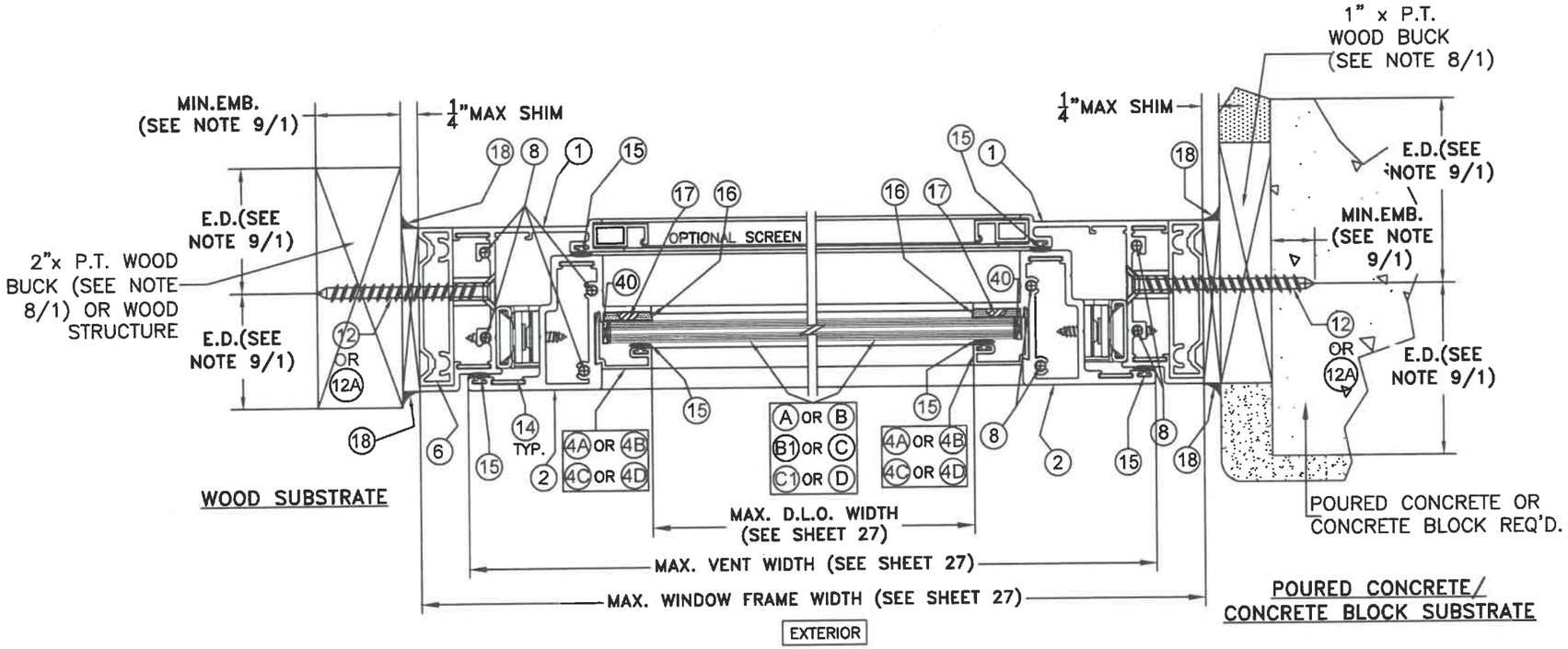

SECTION E–E

SCALE 1/2"=1"

FOR HARDWARE SEE SHEETS 3 & 3A.

WALTER A. TILLIT JR. LICENSE No. 44167 STATE OF FLORIDA PROFESSIONAL ENGINEER

P.E. SEAL/SIGNATURE/DATE

FLORIDA BUILDING CODE (HIGH & NON HIGH VELOCITY HURRICANE ZONE)

©2020 TILTECO, INC.

TILTECO INC.
TILLIT TESTING & ENGINEERING COMPANY
6355 N.W. 36th. St., Ste. 305, VIRGINIA GARDENS, FL 33166
Phone : (305)871-1530 . Fax : (305)871-1531
CA-0006719
WALTER A. TILLIT Jr. P.E.
FLORIDA Lic. # 44167

SERIES VPF 8000 ALUMINUM AWNING WINDOW–LMI

ALUMINA DISTRIBUTION CENTER
15002 N.W. 107 AVENUE, SUITE # 1
HIALEAH GARDENS, FL. 33018
PHONE: (305) 444-1198

REV. NO	DESCRIPTION	DATE	REV. No	DESCRIPTION	DATE
1	OLD 20-002	08/03/20	3		
2			4		

F.P.
DRAWN BY:
08/03/20
DATE:
20-227
DRAWING No.

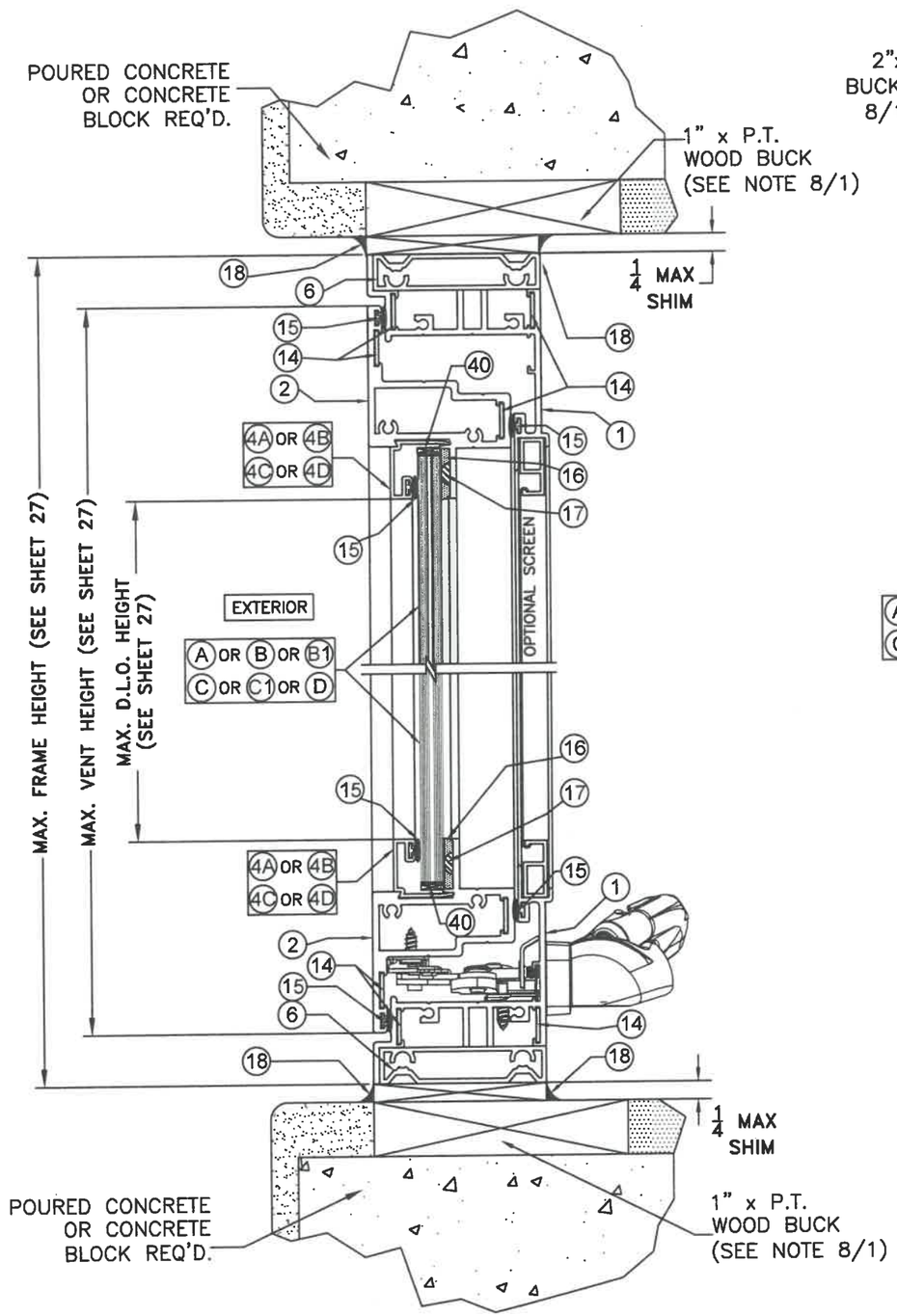

POURED CONCRETE/
CONCRETE BLOCK SUBSTRATE

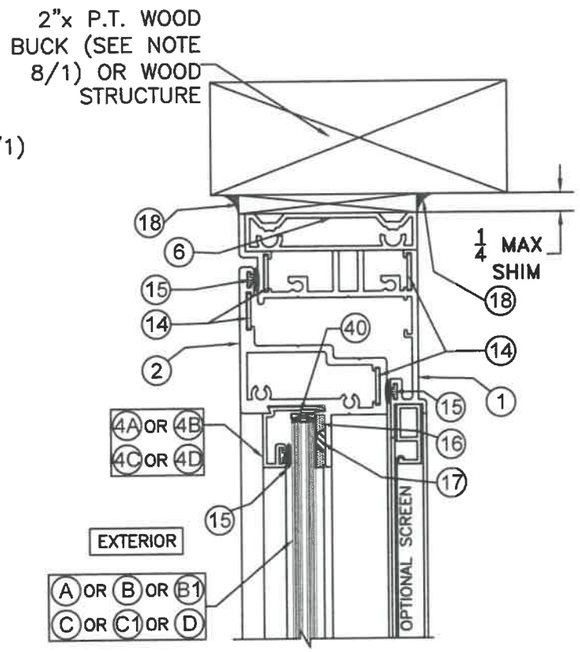

WOOD
SUBSTRATE

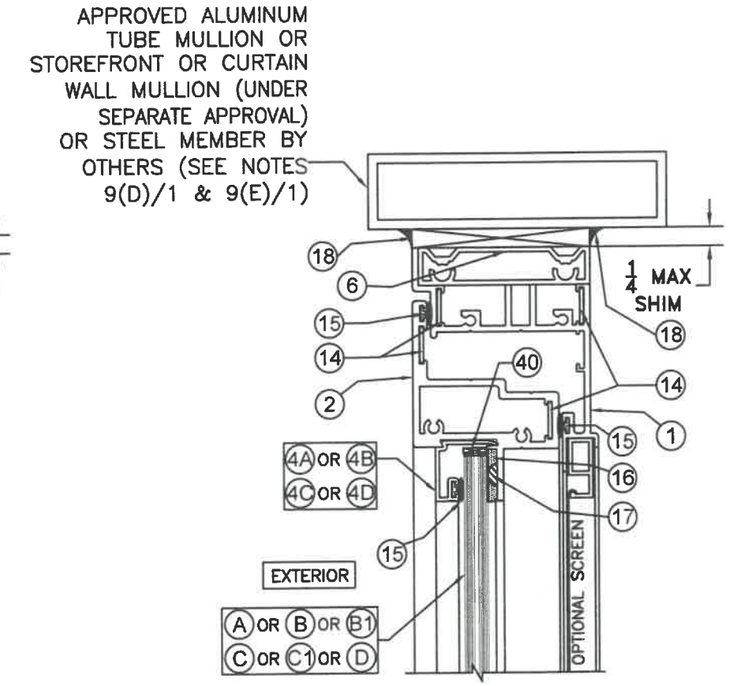

ALUMINUM MULLION OR
STEEL MEMBER
SUBSTRATE

SECTION F–F

SCALE 1/2"=1"

FOR HARDWARE SEE SHEETS 3 & 3A.

WALTER A. TILLIT JR. LICENSE No. 44167 STATE OF FLORIDA PROFESSIONAL ENGINEER

P.E. SEAL/SIGNATURE/DATE

FLORIDA BUILDING CODE (HIGH & NON HIGH VELOCITY HURRICANE ZONE)

©2020 TILTECO, INC.

TILTECO INC.

TILLIT TESTING & ENGINEERING COMPANY
6355 N.W. 36th. St., Ste. 305, VIRGINIA GARDENS, FL 33166
Phone : (305)871-1530 . Fax : (305)871-1531
CA-0006719
WALTER A. TILLIT Jr. P.E.
FLORIDA Lic. # 44167

SERIES VPF 8000 ALUMINUM AWNING WINDOW-LMI

ALUMINA DISTRIBUTION CENTER
15002 N.W. 107 AVENUE, SUITE # 1
HIALEAH GARDENS, FL 33018
PHONE: (305) 444-1198

REV. NO	DESCRIPTION	DATE	REV. No	DESCRIPTION	DATE
1	OLD 20-002	08/03/20	3		
2			4		

F.P.
DRAWN BY:

08/03/20
DATE:

20-227
DRAWING No.

SHEET 23 OF 34

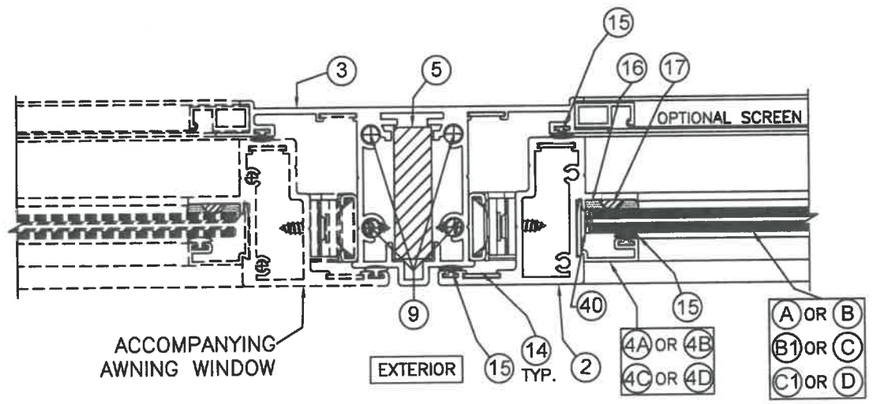

SECTION G–G

SCALE 1/2"=1"

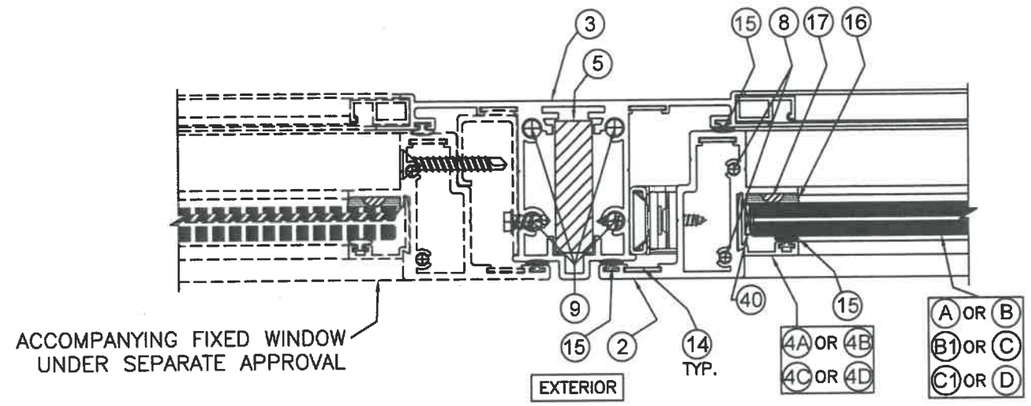

SECTION H–H

SCALE 1/2"=1"

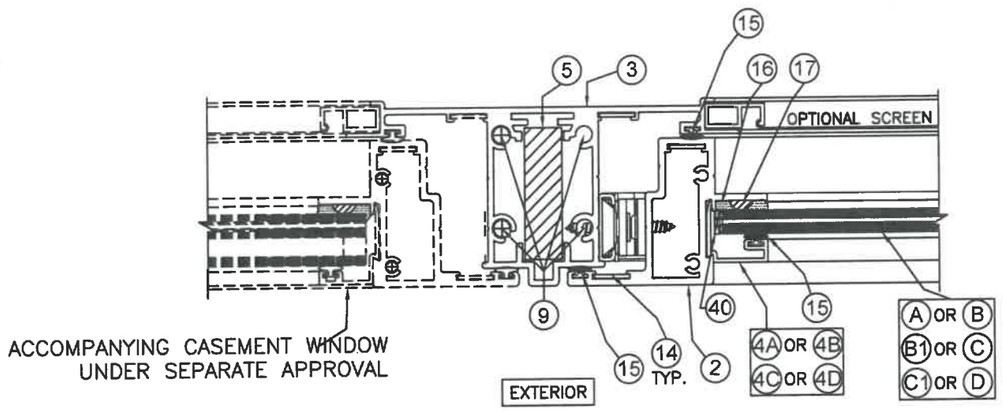

SECTION I–I

SCALE 1/2"=1"

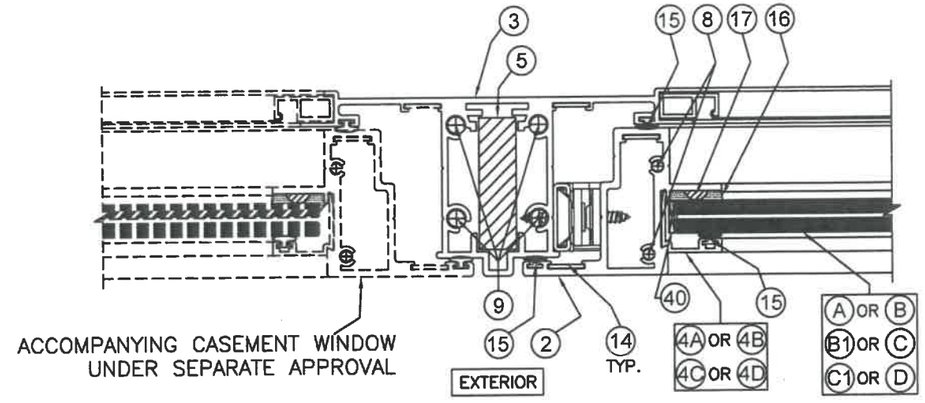

SECTION J–J

SCALE 1/2"=1"

FOR HARDWARE SEE SHEETS 3 & 3A.

WALTER A. TILLIT JR. LICENSE No. 44167 STATE OF FLORIDA PROFESSIONAL ENGINEER

P.E. SEAL/SIGNATURE/DATE

FLORIDA BUILDING CODE (HIGH & NON HIGH VELOCITY HURRICANE ZONE)

©2020 TILTECO, INC.

TILTECO INC.
TILLIT TESTING & ENGINEERING COMPANY
6355 N.W. 36th. St., Ste. 305, VIRGINIA GARDENS, FL 33166
Phone : (305)871-1530 . Fax : (305)871-1531
CA-0006719
WALTER A. TILLIT Jr. P.E.
FLORIDA Lic. # 44167

SERIES VPF 8000 ALUMINUM
AWNING WINDOW–LMI

ALUMINA DISTRIBUTION CENTER
15002 N.W. 107 AVENUE, SUITE # 1
HIALEAH GARDENS, FL. 33018
PHONE: (305) 444-1198

REV. NO	DESCRIPTION	DATE	REV. No	DESCRIPTION	DATE
1	OLD 20-002	08/03/20	3		
2			4		

F.P.
DRAWN BY:

08/03/20
DATE:

20-227
DRAWING No.

SHEET 24 OF 34

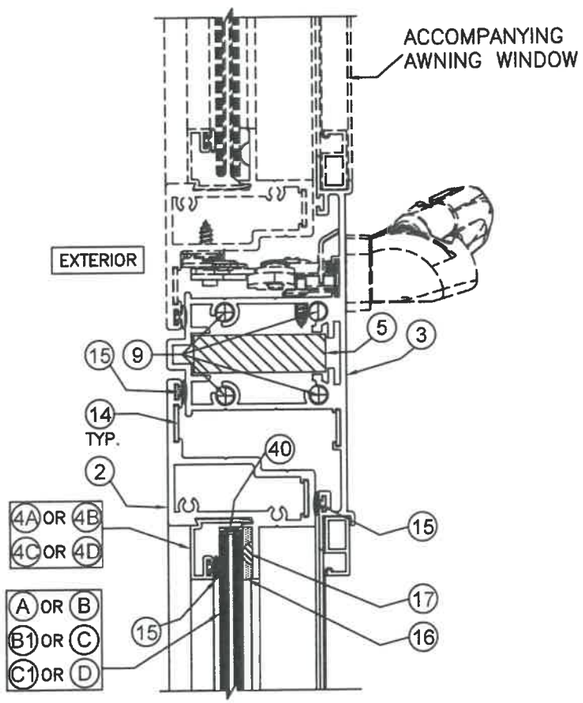

SECTION K–K

SCALE 1/2"=1"

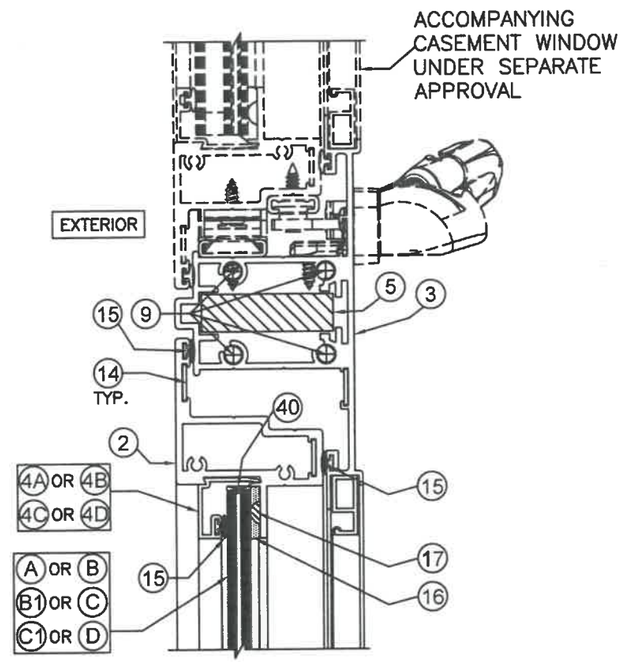

SECTION L–L

SCALE 1/2"=1"

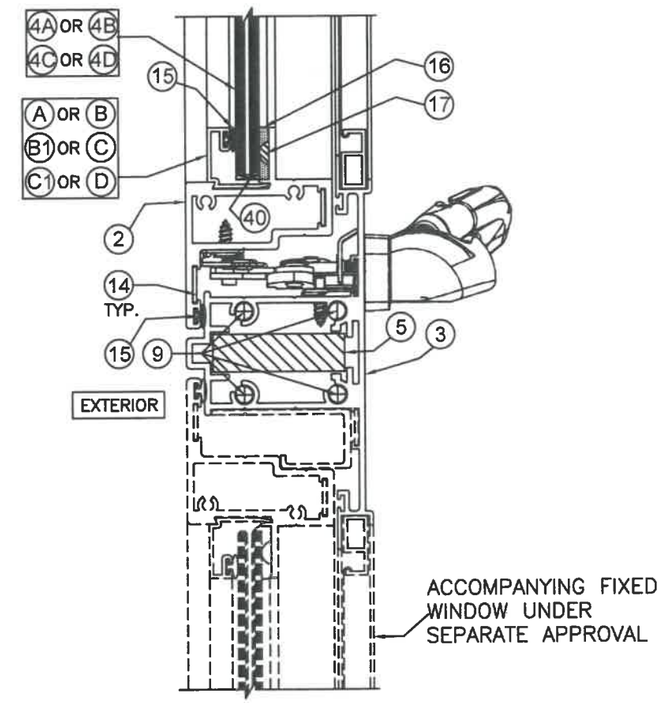

SECTION M–M

SCALE 1/2"=1"

FOR HARDWARE SEE SHEETS 3 & 3A.

WALTER A. TILLIT JR.
LICENSE
No. 44167
STATE OF FLORIDA
PROFESSIONAL ENGINEER

P.E. SEAL/SIGNATURE/DATE

FLORIDA BUILDING CODE (HIGH & NON HIGH VELOCITY HURRICANE ZONE)

©2020 TILTECO, INC.

TILTECO INC.

TILLIT TESTING & ENGINEERING COMPANY
6355 N.W. 36th. St., Ste. 305, VIRGINIA GARDENS, FL 33166
Phone : (305)871-1530 . Fax : (305)871-1531
CA-0006719
WALTER A. TILLIT Jr. P.E.
FLORIDA Lic. # 44167

SERIES VPF 8000 ALUMINUM
AWNING WINDOW-LMI

ALUMINA DISTRIBUTION CENTER
15002 N.W. 107 AVENUE, SUITE # 1
HIALEAH GARDENS, FL 33018
PHONE: (305) 444-1198

REV. NO	DESCRIPTION	DATE	REV. No	DESCRIPTION	DATE
1	OLD 20-002	08/03/20	3		
2			4		

F.P.
DRAWN BY:

08/03/20
DATE:

20-227
DRAWING No.

SHEET 25 OF 34

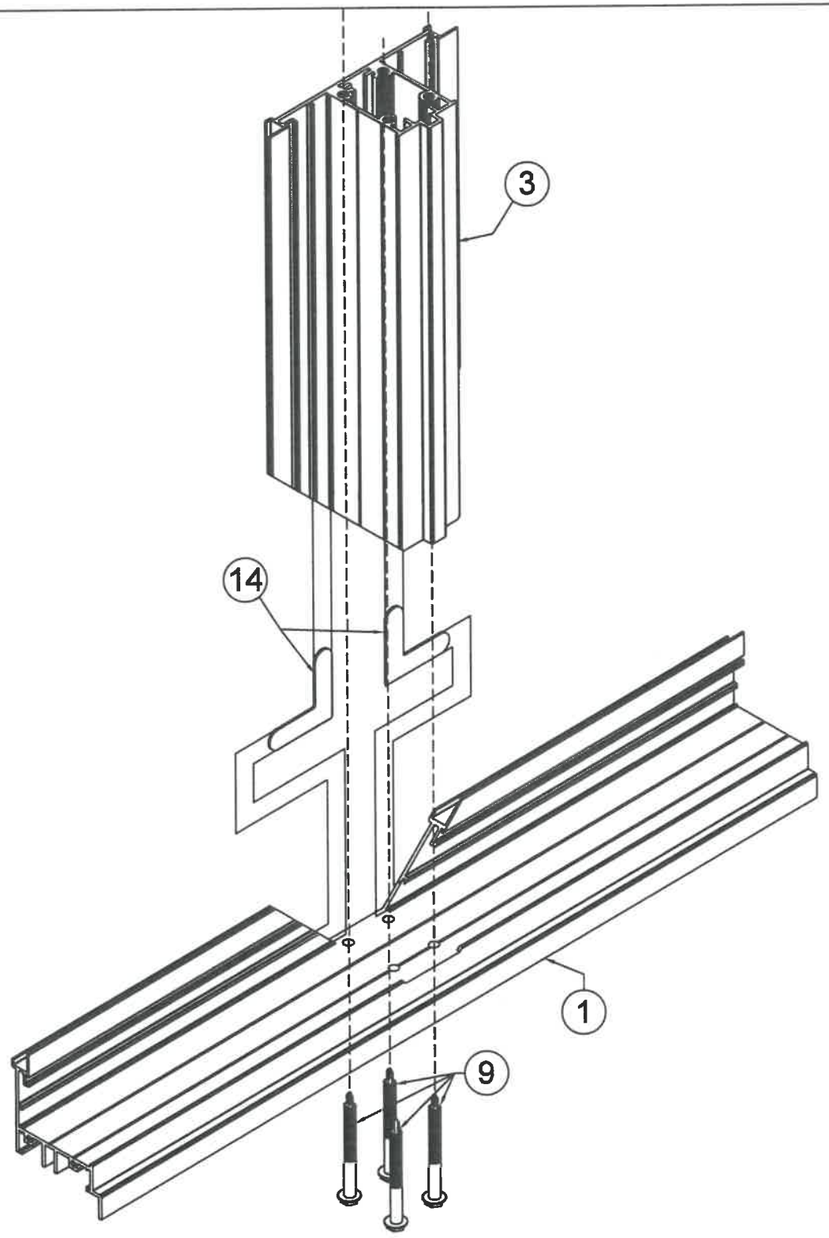

CENTER POST ASSEMBLY

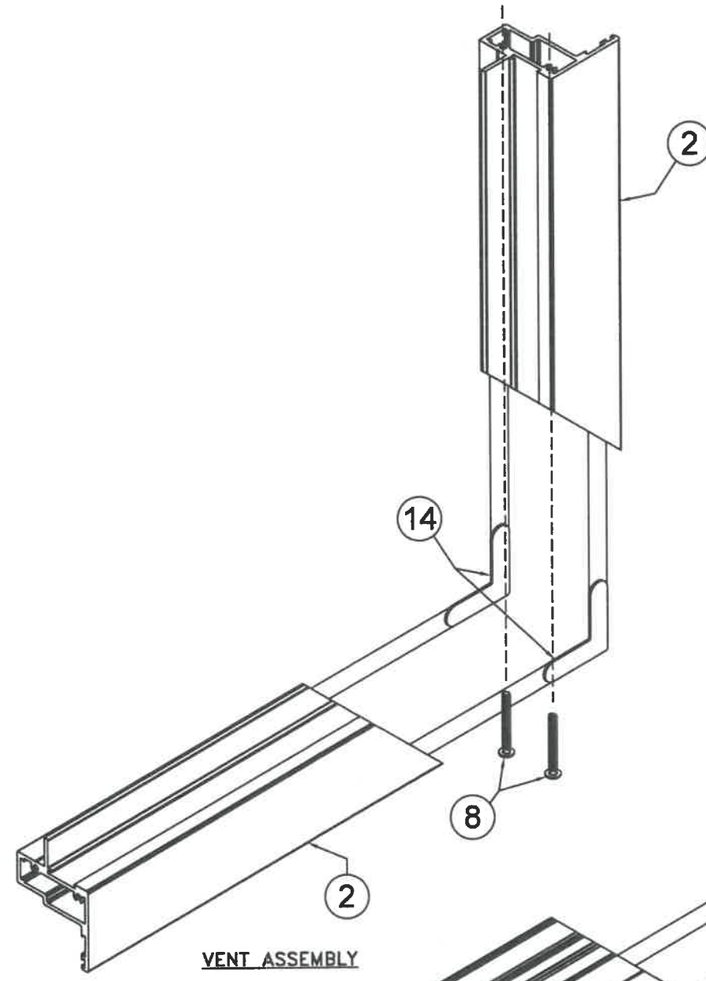

VENT ASSEMBLY

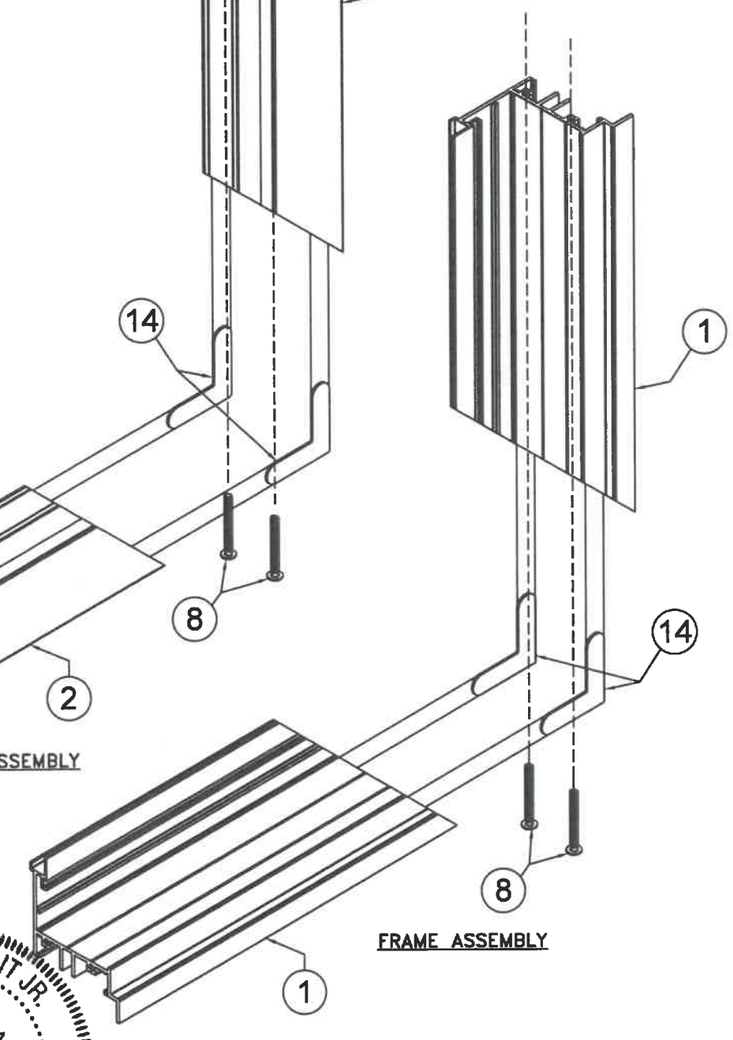

FRAME ASSEMBLY

ASSEMBLY DETAIL ISOMETRIC

WALTER A. TILLIT JR. LICENSE No. 44167 STATE OF FLORIDA PROFESSIONAL ENGINEER

8/17/2020

P.E. SEAL/SIGNATURE/DATE

FLORIDA BUILDING CODE (HIGH & NON HIGH VELOCITY HURRICANE ZONE)

©2020 TILTECO, INC.

TILTECO INC.

TILLIT TESTING & ENGINEERING COMPANY
6355 N.W. 36th. St., Ste. 305, VIRGINIA GARDENS, FL 33166
Phone : (305)871-1530 . Fax : (305)871-1531
CA-0006719
WALTER A. TILLIT Jr. P.E.
FLORIDA Lic. # 44167

SERIES VPF 8000 ALUMINUM AWNING WINDOW-LMI

ALUMINA DISTRIBUTION CENTER
15002 N.W. 107 AVENUE, SUITE # 1
HIALEAH GARDENS, FL 33018
PHONE: (305) 444-1198

REV. NO	DESCRIPTION	DATE	REV. No	DESCRIPTION	DATE
1	OLD 20-002	08/03/20	3		
2			4		

F.P.
DRAWN BY:

08/03/20
DATE:

20-227
DRAWING No.

SHEET 26 OF 34

SCHEDULE #1: VALID FOR INSTALLATIONS ON SHEETS 7, 8, 10 THRU 17 (VERTICAL ORIENTATION)

MAX. ASD. DESIGN PRESSURE RATING AND CORRESPONDING MAX. FRAME, VENT & DLO. DIMENSIONS FOR AWNING WINDOWS FOR FRAME HEIGHT ≤ 74"

MAX. ASD DESIGN PRESSURE RATING	MAX. FRAME WIDTH	MAX. FRAME HEIGHT	MAX. VENT WIDTH	MAX. VENT HEIGHT	MAX. D.L.O. WIDTH	MAX. D.L.O. HEIGHT	REQ'D. GLASS TYPE
+72.0, −72.0	42"	74"	41"	72 1/2"	35 5/8"	67 3/16"	A, B, C, D
+105.0, −105.0	42"	55"	41"	53 3/8"	35 5/8"	48 1/16"	B1, C1
+110.0, −110.0	40"	58"	39"	56 3/8"	33 5/8"	51 1/16"	B1, C1
+120.0, −120.0	37"	63"	36"	61 3/8"	30 5/8"	56 1/16"	B1, C1

SCHEDULE #2: VALID FOR INSTALLATIONS ON SHEETS 7, 8, 10 THRU 17 (HORIZONTAL ORIENTATION)

MAX. ASD. DESIGN PRESSURE RATING AND CORRESPONDING MAX. FRAME, VENT & DLO. DIMENSIONS FOR AWNING WINDOWS FOR FRAME HEIGHT ≤ 74"

MAX. ASD DESIGN PRESSURE RATING	MAX. FRAME WIDTH	MAX. FRAME HEIGHT	MAX. VENT WIDTH	MAX. VENT HEIGHT	MAX. D.L.O. WIDTH	MAX. D.L.O. HEIGHT	REQ'D. GLASS TYPE
+72.0, −72.0	74"	42"	72 1/2"	41"	67 3/16"	35 5/8"	A, B, C, D
+105.0, −105.0	55"	42"	53 3/8"	41"	48 1/16"	35 5/8"	B1, C1
+110.0, −110.0	58"	40"	56 3/8"	39"	51 1/16"	33 5/8"	B1, C1
+120.0, −120.0	63"	37"	61 3/8"	36"	56 1/16"	30 5/8"	B1, C1

SCHEDULE #3: VALID FOR INSTALLATIONS ON SHEET 9 (VERTICAL ORIENTATION)

MAX. ASD. DESIGN PRESSURE RATING AND CORRESPONDING MAX. FRAME, VENT & DLO. DIMENSIONS FOR AWNING WINDOWS FOR FRAME HEIGHT UP TO 74"

MAX. ASD DESIGN PRESSURE RATING	MAX. FRAME WIDTH	MAX. FRAME HEIGHT	MAX. VENT WIDTH	MAX. VENT HEIGHT	MAX. D.L.O. WIDTH	MAX. D.L.O. HEIGHT	REQ'D. GLASS TYPE
+72.0, −72.0	42"	74"	40 1/2"	72 1/2"	35 3/16"	67 3/16"	A, B, C, D

SCHEDULE #4: VALID FOR INSTALLATIONS ON SHEET 9 (HORIZONTAL ORIENTATION)

MAX. ASD. DESIGN PRESSURE RATING AND CORRESPONDING MAX. FRAME, VENT & DLO. DIMENSIONS FOR AWNING WINDOWS FOR FRAME HEIGHT THAN 74" UP TO 84"

MAX. ASD DESIGN PRESSURE RATING	MAX. FRAME WIDTH	MAX. FRAME HEIGHT	MAX. VENT WIDTH	MAX. VENT HEIGHT	MAX. D.L.O. WIDTH	MAX. D.L.O. HEIGHT	REQ'D. GLASS TYPE
+72.0, −72.0	84"	42"	82 1/2"	40 1/2"	77 3/16"	35 3/16"	A, B, C, D

WALTER A. TILLIT JR. LICENSE No. 44167 STATE OF FLORIDA PROFESSIONAL ENGINEER

8/17/2020

P.E. SEAL/SIGNATURE/DATE

FLORIDA BUILDING CODE (HIGH & NON HIGH VELOCITY HURRICANE ZONE)

©2020 TILTECO, INC.

TILTECO INC.
TILLIT TESTING & ENGINEERING COMPANY
6355 N.W. 36th. St., Ste. 305, VIRGINIA GARDENS, FL 33166
Phone : (305)871-1530 . Fax : (305)871-1531
CA-0006719
WALTER A. TILLIT Jr. P.E.
FLORIDA Lic. # 44167

SERIES VPF 8000 ALUMINUM AWNING WINDOW-LMI

ALUMINA DISTRIBUTION CENTER
15002 N.W. 107 AVENUE, SUITE # 1
HIALEAH GARDENS, FL. 33018
PHONE: (305) 444-1198

REV. NO	DESCRIPTION	DATE	REV. No	DESCRIPTION	DATE
1	OLD 20-002	08/03/20	3		
2			4		

F.P.
DRAWN BY:

08/03/20
DATE:

20-227
DRAWING No.

MAXIMUM ANCHOR SPACING "S" AT ATTACHED JAMB FOR AWNING WINDOWS W/ MAX. FRAME HEIGHT ≤ 74" (VERTICAL ORIENTATION)

SUBSTRATE	ANCHOR TYPE	MAX. ASD DESIGN PRESSURE RATING (psf.)	MAX. FRAME WIDTH	MAX. FRAME HEIGHT	"S" (O.C.) AT JAMB
POURED CONCRETE f'c=3000psi	12 OR 12A	+72.0, −72.0	42"	74"	15"
		+75.0, −75.0	42"	55"	14"
			40"	58"	15"
			37"	63"	16"
		+80.0, −80.0	42"	55"	13"
			40"	58"	14"
			37"	63"	15"
		+85.0, −85.0	42"	55"	12"
			40"	58"	13"
			37"	63"	14"
		+90.0, −90.0	42"	55"	12"
			40"	58"	12"
			37"	63"	13"
		+95.0, −95.0	42"	55"	11"
			40"	58"	12"
			37"	63"	13"
		+100.0, −100.0	42"	55"	11"
			40"	58"	11"
			37"	63"	12"
		+105.0, −105.0	42"	55"	10"
			40"	58"	11"
			37"	63"	11"
		+110.0, −110.0	40"	58"	10"
			37"	63"	11"
		+115.0, −115.0	37"	63"	10"
		+120.0, −120.0	37"	63"	10"

CONTINUED

SUBSTRATE	ANCHOR TYPE	MAX. ASD DESIGN PRESSURE RATING (psf.)	MAX. FRAME WIDTH	MAX. FRAME HEIGHT	"S" (O.C.) AT JAMB
CONCRETE BLOCK	12 OR 12A	+72.0, −72.0	42"	74"	12"
		+75.0, −75.0	42"	55"	12"
			40"	58"	12"
			37"	63"	13"
		+80.0, −80.0	42"	55"	11"
			40"	58"	12"
			37"	63"	13"
		+85.0, −85.0	42"	55"	10"
			40"	58"	11"
			37"	63"	12"
		+90.0, −90.0	42"	55"	10"
			40"	58"	10"
			37"	63"	11"
		+95.0, −95.0	42"	55"	9"
			40"	58"	10"
			37"	63"	10"
		+100.0, −100.0	42"	55"	9"
			40"	58"	9"
			37"	63"	10"
		+105.0, −105.0	42"	55"	8"
			40"	58"	9"
			37"	63"	9"
		+110.0, −110.0	40"	58"	8"
			37"	63"	9"
		+115.0, −115.0	37"	63"	9"
		+120.0, −120.0	37"	63"	8"

CONTINUED

SUBSTRATE	ANCHOR TYPE	MAX. ASD DESIGN PRESSURE RATING (psf.)	MAX. FRAME WIDTH	MAX. FRAME HEIGHT	"S" (O.C.) AT JAMB
ALUMINUM OR STEEL	13	+72.0, −72.0	42"	74"	16"
		+75.0, −75.0	42"	55"	16"
			40"	58"	16"
			37"	63"	16"
		+80.0, −80.0	42"	55"	16"
			40"	58"	16"
			37"	63"	16"
		+85.0, −85.0	42"	55"	15"
			40"	58"	16"
			37"	63"	16"
		+90.0, −90.0	42"	55"	14"
			40"	58"	15"
			37"	63"	16"
		+95.0, −95.0	42"	55"	13"
			40"	58"	14"
			37"	63"	15"
		+100.0, −100.0	42"	55"	13"
			40"	58"	13"
			37"	63"	14"
		+105.0, −105.0	42"	55"	12"
			40"	58"	13"
			37"	63"	14"
		+110.0, −110.0	40"	58"	12"
			37"	63"	13"
		+115.0, −115.0	37"	63"	12"
		+120.0, −120.0	37"	63"	12"

CONTINUED

SUBSTRATE	ANCHOR TYPE	MAX. ASD DESIGN PRESSURE RATING (psf.)	MAX. FRAME WIDTH	MAX. FRAME HEIGHT	"S" (O.C.) AT JAMB
WOOD	12 OR 12A	+72.0, −72.0	42"	74"	15"
		+75.0, −75.0	42"	55"	14"
			40"	58"	15"
			37"	63"	16"
		+80.0, −80.0	42"	55"	13"
			40"	58"	14"
			37"	63"	15"
		+85.0, −85.0	42"	55"	12"
			40"	58"	13"
			37"	63"	14"
		+90.0, −90.0	42"	55"	12"
			40"	58"	12"
			37"	63"	13"
		+95.0, −95.0	42"	55"	11"
			40"	58"	12"
			37"	63"	13"
		+100.0, −100.0	42"	55"	11"
			40"	58"	11"
			37"	63"	12"
		+105.0, −105.0	42"	55"	10"
			40"	58"	11"
			37"	63"	11"
		+110.0, −110.0	40"	58"	10"
			37"	63"	11"
		+115.0, −115.0	37"	63"	10"
		+120.0, −120.0	37"	63"	10"

WALTER A. TILLIT JR. LICENSE No. 44167 STATE OF FLORIDA PROFESSIONAL ENGINEER

P.E. SEAL/SIGNATURE/DATE

FLORIDA BUILDING CODE (HIGH & NON HIGH VELOCITY HURRICANE ZONE)

©2020 TILTECO, INC.

TILTECO INC.
TILLIT TESTING & ENGINEERING COMPANY
6355 N.W. 36th. St., Ste. 305, VIRGINIA GARDENS, FL 33166
Phone : (305)871-1530 . Fax : (305)871-1531
CA-0006719
WALTER A. TILLIT Jr. P.E.
FLORIDA Lic. # 44167

SERIES VPF 8000 ALUMINUM AWNING WINDOW-LMI

ALUMINA DISTRIBUTION CENTER
15002 N.W. 107 AVENUE, SUITE # 1
HIALEAH GARDENS, FL 33018
PHONE: (305) 444-1198

REV. NO	DESCRIPTION	DATE	REV. No	DESCRIPTION	DATE
1	OLD 20-002	08/03/20	3		
2			4		

F.P.
DRAWN BY:

08/03/20
DATE:

20-227
DRAWING No.

MAXIMUM ANCHOR SPACING "S" AT ATTACHED HEAD/SILL FOR AWNING WINDOWS W/ MAX. FRAME WIDTH ≤ 74" (HORIZONTAL ORIENTATION)

SUBSTRATE	ANCHOR TYPE	MAX. ASD DESIGN PRESSURE RATING (psf.)	MAX. FRAME WIDTH	MAX. FRAME HEIGHT	"S" (O.C.) AT JAMB
POURED CONCRETE f'c=3000psi	12 OR 12A	+72.0, −72.0	74"	42"	15"
		+75.0, −75.0	55"	42"	14"
			58"	40"	15"
			63"	37"	16"
		+80.0, −80.0	55"	42"	13"
			58"	40"	14"
			63"	37"	15"
		+85.0, −85.0	55"	42"	12"
			58"	40"	13"
			63"	37"	14"
		+90.0, −90.0	55"	42"	12"
			58"	40"	12"
			63"	37"	13"
		+95.0, −95.0	55"	42"	11"
			58"	40"	12"
			63"	37"	13"
		+100.0, −100.0	55"	42"	11"
			58"	40"	11"
			63"	37"	12"
		+105.0, −105.0	55"	42"	10"
			58"	40"	11"
			63"	37"	11"
		+110.0, −110.0	58"	40"	10"
			63"	37"	11"
		+115.0, −115.0	63"	37"	10"
		+120.0, −120.0	63"	37"	10"

CONTINUED

SUBSTRATE	ANCHOR TYPE	MAX. ASD DESIGN PRESSURE RATING (psf.)	MAX. FRAME WIDTH	MAX. FRAME HEIGHT	"S" (O.C.) AT JAMB
CONCRETE BLOCK	12 OR 12A	+72.0, −72.0	74"	42"	12"
		+75.0, −75.0	55"	42"	12"
			58"	40"	12"
			63"	37"	13"
		+80.0, −80.0	55"	42"	11"
			58"	40"	12"
			63"	37"	13"
		+85.0, −85.0	55"	42"	10"
			58"	40"	11"
			63"	37"	12"
		+90.0, −90.0	55"	42"	10"
			58"	40"	10"
			63"	37"	11"
		+95.0, −95.0	55"	42"	9"
			58"	40"	10"
			63"	37"	10"
		+100.0, −100.0	55"	42"	9"
			58"	40"	9"
			63"	37"	10"
		+105.0, −105.0	55"	42"	8"
			58"	40"	9"
			63"	37"	9"
		+110.0, −110.0	58"	40"	8"
			63"	37"	9"
		+115.0, −115.0	63"	37"	9"
		+120.0, −120.0	63"	37"	8"

CONTINUED

SUBSTRATE	ANCHOR TYPE	MAX. ASD DESIGN PRESSURE RATING (psf.)	MAX. FRAME WIDTH	MAX. FRAME HEIGHT	"S" (O.C.) AT JAMB
ALUMINUM OR STEEL	13	+72.0, −72.0	74"	42"	16"
		+75.0, −75.0	55"	42"	16"
			58"	40"	16"
			63"	37"	16"
		+80.0, −80.0	55"	42"	16"
			58"	40"	16"
			63"	37"	16"
		+85.0, −85.0	55"	42"	15"
			58"	40"	16"
			63"	37"	16"
		+90.0, −90.0	55"	42"	14"
			58"	40"	15"
			63"	37"	16"
		+95.0, −95.0	55"	42"	13"
			58"	40"	14"
			63"	37"	15"
		+100.0, −100.0	55"	42"	13"
			58"	40"	13"
			63"	37"	14"
		+105.0, −105.0	55"	42"	12"
			58"	40"	13"
			63"	37"	14"
		+110.0, −110.0	58"	40"	12"
			63"	37"	13"
		+115.0, −115.0	63"	37"	12"
		+120.0, −120.0	63"	37"	12"

CONTINUED

SUBSTRATE	ANCHOR TYPE	MAX. ASD DESIGN PRESSURE RATING (psf.)	MAX. FRAME WIDTH	MAX. FRAME HEIGHT	"S" (O.C.) AT JAMB
WOOD	12 OR 12A	+72.0, −72.0	74"	42"	15"
		+75.0, −75.0	55"	42"	14"
			58"	40"	15"
			63"	37"	16"
		+80.0, −80.0	55"	42"	13"
			58"	40"	14"
			63"	37"	15"
		+85.0, −85.0	55"	42"	12"
			58"	40"	13"
			63"	37"	14"
		+90.0, −90.0	55"	42"	12"
			58"	40"	12"
			63"	37"	13"
		+95.0, −95.0	55"	42"	11"
			58"	40"	12"
			63"	37"	13"
		+100.0, −100.0	55"	42"	11"
			58"	40"	11"
			63"	37"	12"
		+105.0, −105.0	55"	42"	10"
			58"	40"	11"
			63"	37"	11"
		+110.0, −110.0	58"	40"	10"
			63"	37"	11"
		+115.0, −115.0	63"	37"	10"
		+120.0, −120.0	63"	37"	10"

WALTER A. TILLIT JR. LICENSE No. 44167 STATE OF FLORIDA PROFESSIONAL ENGINEER

P.E. SEAL/SIGNATURE/DATE

FLORIDA BUILDING CODE (HIGH & NON HIGH VELOCITY HURRICANE ZONE)

©2020 TILTECO, INC.

TILTECO INC.
TILLIT TESTING & ENGINEERING COMPANY
6355 N.W. 36th. St., Ste. 305, VIRGINIA GARDENS, FL 33166
Phone : (305)871-1530 , Fax : (305)871-1531
CA-0006719
WALTER A. TILLIT Jr. P.E.
FLORIDA Lic. # 44167

SERIES VPF 8000 ALUMINUM AWNING WINDOW-LMI

ALUMINA DISTRIBUTION CENTER
15002 N.W. 107 AVENUE, SUITE # 1
HIALEAH GARDENS, FL. 33018
PHONE: (305) 444-1198

REV. NO	DESCRIPTION	DATE	REV. No	DESCRIPTION	DATE
1	OLD 20-002	08/03/20	3		
2			4		

F.P.
DRAWN BY:

08/03/20
DATE:

20-227
DRAWING No.

MAX. ANCHOR SPACING "S"(AT JAMB) & "S"(AT HEAD/SILL) AT AWNING WINDOW W/ MAX. FRAME WIDTH LARGER THAN 74" UP TO 84" (HORIZONTAL ORIENTATION)					
SUBSTRATE	ANCHOR TYPE	MAX. ASD DESIGN PRESSURE RATING (psf.)	MAX. FRAME WIDTH	MAX. FRAME HEIGHT	"S"
POURED CONCRETE f'c=3000psi	12 OR 12A	+72.0, −72.0	84"	42"	15"
CONCRETE BLOCK	12 OR 12A	±55.0 OR LEES	84"	42"	15"
		±55.0 UP TO ±72.0	84"	42"	12"
METAL	13	+72.0, −72.0	84"	42"	15"
WOOD	12 OR 12A	+72.0, −72.0	84"	42"	15"

WALTER A. TILLIT JR. LICENSE No. 44167 STATE OF FLORIDA PROFESSIONAL ENGINEER

P.E. SEAL/SIGNATURE/DATE

FLORIDA BUILDING CODE (HIGH & NON HIGH VELOCITY HURRICANE ZONE)

©2020 TILTECO, INC.

TILTECO INC.
TILLIT TESTING & ENGINEERING COMPANY
6355 N.W. 36th. St., Ste. 305, VIRGINIA GARDENS, FL 33166
Phone : (305)871-1530 . Fax : (305)871-1531
CA-0006719
WALTER A. TILLIT Jr. P.E.
FLORIDA Lic. # 44167

SERIES VPF 8000 ALUMINUM AWNING WINDOW-LMI

ALUMINA DISTRIBUTION CENTER
15002 N.W. 107 AVENUE, SUITE # 1
HIALEAH GARDENS, FL. 33018
PHONE: (305) 444-1198

REV. NO	DESCRIPTION	DATE	REV. No	DESCRIPTION	DATE
1	OLD 20-002	08/03/20	3		
2			4		

F.P.
DRAWN BY:

08/03/20
DATE:

20-227
DRAWING No.

SCHEDULE #5: VALID FOR INSTALLATIONS PER SHEETS 8, 10, 13, 17(AS APPLICABLE) (VERTICAL ORIENTATION)

MAXIMUM # OF ANCHORS "n" AT EA. OF TWO CLUSTERS AT HEAD OR SILL FOR AWNING WINDOWS WHEN JAMBS ARE NOT ATTACHED TO WALL

SUBSTRATE	ANCHOR TYPE	MAX. ASD DESIGN PRESSURE RATING (psf.)	MAX. FRAME WIDTH	MAX. FRAME HEIGHT	"n"
POURED CONCRETE f'c=3000psi	12 OR 12A	+72.0, −72.0	42"	74"	3
		+75.0, −75.0 TO +80.0, −80.0	42"	55"	2
			40"	58"	2
			37"	63"	2
		+85.0, −85.0 TO +115.0, −115.0	42"	55"	3
			40"	58"	3
			37"	63"	3
		+120.0, −120.0	37"	63"	3
ALUMINUM OR STEEL	13	+72.0, −72.0	42"	74"	2
		+75.0, −75.0 TO +95.0, −95.0	42"	55"	2
			40"	58"	2
			37"	63"	2
		+100.0, −100.0 TO +115.0, −115.0	42"	55"	3
			40"	58"	3
			37"	63"	3
		+120.0, −120.0	37"	63"	3

SCHEDULE #5 (CONTINUED)

SUBSTRATE	ANCHOR TYPE	MAX. ASD DESIGN PRESSURE RATING (psf.)	MAX. FRAME WIDTH	MAX. FRAME HEIGHT	"n"
CONCRETE BLOCK	12 OR 12A	+72.0, −72.0	42"	74"	3
		+75.0, −75.0 TO +100.0, −100.0	42"	55"	3
			40"	58"	3
			37"	63"	3
		+105.0, −105.0 TO +115.0, −115.0	42"	55"	4
			40"	58"	4
			37"	63"	4
		+120.0, −120.0	37"	63"	4
WOOD	12 OR 12A	+72.0, −72.0	42"	74"	3
		+75.0, −75.0 TO +80.0, −80.0	42"	55"	2
			40"	58"	2
			37"	63"	2
		+85.0, −85.0 TO +115.0, −115.0	42"	55"	3
			40"	58"	3
			37"	63"	3
		+120.0, −120.0	37"	63"	3

WALTER A. TILLIT JR. LICENSE No. 44167 STATE OF FLORIDA PROFESSIONAL ENGINEER

P.E. SEAL/SIGNATURE/DATE

FLORIDA BUILDING CODE (HIGH & NON HIGH VELOCITY HURRICANE ZONE)

©2020 TILTECO, INC.

TILTECO INC.
TILLIT TESTING & ENGINEERING COMPANY
6355 N.W. 36th. St., Ste. 305, VIRGINIA GARDENS, FL 33166
Phone : (305)871-1530 . Fax : (305)871-1531
CA-0006719
WALTER A. TILLIT Jr. P.E.
FLORIDA Lic. # 44167

SERIES VPF 8000 ALUMINUM AWNING WINDOW-LMI

ALUMINA DISTRIBUTION CENTER
15002 N.W. 107 AVENUE, SUITE # 1
HIALEAH GARDENS, FL. 33018
PHONE: (305) 444-1198

REV. NO	DESCRIPTION	DATE	REV. No	DESCRIPTION	DATE
1	OLD 20-002	08/03/20	3		
2			4		

F.P.
DRAWN BY:

08/03/20
DATE:

20-227
DRAWING No.

SCHEDULE #6: VALID FOR INSTALLATIONS PER SHEETS 8, 11, 12, 14, 15, 16, 17(AS APPLICABLE) (HORIZONTAL ORIENTATION)

MAXIMUM # OF ANCHORS "n" AT EA. OF TWO CLUSTERS AT JAMBS FOR AWNING WINDOWS WHEN HEAD/SILL ARE NOT ATTACHED TO WALL

SUBSTRATE	ANCHOR TYPE	MAX. ASD DESIGN PRESSURE RATING (psf.)	MAX. FRAME WIDTH	MAX. FRAME HEIGHT	"n"
POURED CONCRETE f'c=3000psi	12 OR 12A	+72.0, −72.0	74"	42"	3
		+75.0, −75.0 TO +80.0, −80.0	55"	42"	2
			58"	40"	2
			63"	37"	2
		+85.0, −85.0 TO +115.0, −115.0	55"	42"	3
			58"	40"	3
			63"	37"	3
		+120.0, −120.0	63"	37"	3
ALUMINUM OR STEEL	13	+72.0, −72.0	74"	42"	2
		+75.0, −75.0 TO +95.0, −95.0	55"	42"	2
			58"	40"	2
			63"	37"	2
		+100.0, −100.0 TO +115.0, −115.0	55"	42"	3
			58"	40"	3
			63"	37"	3
		+120.0, −120.0	63"	37"	3

SCHEDULE #6 (CONTINUED)

SUBSTRATE	ANCHOR TYPE	MAX. ASD DESIGN PRESSURE RATING (psf.)	MAX. FRAME WIDTH	MAX. FRAME HEIGHT	"n"
CONCRETE BLOCK	12 OR 12A	+72.0, −72.0	74"	42"	3
		+75.0, −75.0 TO +100.0, −100.0	55"	42"	3
			58"	40"	3
			63"	37"	3
		+105.0, −105.0 TO +115.0, −115.0	55"	42"	4
			58"	40"	4
			63"	37"	4
		+120.0, −120.0	63"	37"	4
WOOD	12 OR 12A	+72.0, −72.0	74"	42"	3
		+75.0, −75.0 TO +80.0, −80.0	55"	42"	2
			58"	40"	2
			63"	37"	2
		+85.0, −85.0 TO +115.0, −115.0	55"	42"	3
			58"	40"	3
			63"	37"	3
		+120.0, −120.0	63"	37"	3

WALTER A. TILLIT JR. LICENSE No. 44167 STATE OF FLORIDA PROFESSIONAL ENGINEER

P.E. SEAL/SIGNATURE/DATE

FLORIDA BUILDING CODE (HIGH & NON HIGH VELOCITY HURRICANE ZONE)

©2020 TILTECO, INC.

TILTECO INC.
TILLIT TESTING & ENGINEERING COMPANY
6355 N.W. 36th. St., Ste. 305, VIRGINIA GARDENS, FL 33166
Phone : (305)871-1530 . Fax : (305)871-1531
CA-0006719
WALTER A. TILLIT Jr. P.E.
FLORIDA Lic. # 44167

SERIES VPF 8000 ALUMINUM AWNING WINDOW-LMI

ALUMINA DISTRIBUTION CENTER
15002 N.W. 107 AVENUE, SUITE # 1
HIALEAH GARDENS, FL. 33018
PHONE: (305) 444-1198

REV. NO	DESCRIPTION	DATE	REV. No	DESCRIPTION	DATE
1	OLD 20-002	08/03/20	3		
2			4		

F.P.
DRAWN BY:

08/03/20
DATE:

20-227
DRAWING No.

SCHEDULE #7: VALID FOR INSTALLATIONS PER SHEET 17

MAXIMUM # OF ANCHORS "n" AT CLUSTER AT EA. END OF HORIZONTAL CENTER POST (3) AT JAMBS FOR VERTICAL COMBINATION OF VERTICALLY ORIENTED AWNINGS WINDOWS

SUBSTRATE	ANCHOR TYPE	MAX. ASD DESIGN PRESSURE RATING (psf.)	MAX. FRAME WIDTH	MAX. FRAME HEIGHT	"n"
POURED CONCRETE f'c=3000psi	(12) OR (12A)	+72.0, −72.0	42"	74"	6
		+75.0, −75.0 TO +80.0, −80.0	42"	55"	4
			40"	58"	4
			37"	63"	4
		+85.0, −85.0 TO +115.0, −115.0	42"	55"	6
			40"	58"	6
			37"	63"	6
		+120.0, −120.0	37"	63"	6
ALUMINUM OR STEEL	(13)	+72.0, −72.0	42"	74"	4
		+75.0, −75.0 TO +95.0, −95.0	42"	55"	4
			40"	58"	4
			37"	63"	4
		+100.0, −100.0 TO +115.0, −115.0	42"	55"	6
			40"	58"	6
			37"	63"	6
		+120.0, −120.0	37"	63"	6

* TOTAL NUMBER OF ANCHORS ("n") SHALL BE UNIFORMLY DISTRIBUTED AT (n/2) ANCHORS ABOVE & BELOW OF HORIZONTAL CENTER POST (3) AT JAMBS

SCHEDULE #7 (CONTINUED)

SUBSTRATE	ANCHOR TYPE	MAX. ASD DESIGN PRESSURE RATING (psf.)	MAX. FRAME WIDTH	MAX. FRAME HEIGHT	"n"
CONCRETE BLOCK	(12) OR (12A)	+72.0, −72.0	42"	74"	6
		+75.0, −75.0 TO +100.0, −100.0	42"	55"	6
			40"	58"	6
			37"	63"	6
		+105.0, −105.0 TO +115.0, −115.0	42"	55"	8
			40"	58"	8
			37"	63"	8
		+120.0, −120.0	37"	63"	8
WOOD	(12) OR (12A)	+72.0, −72.0	42"	74"	6
		+75.0, −75.0 TO +80.0, −80.0	42"	55"	4
			40"	58"	4
			37"	63"	4
		+85.0, −85.0 TO +115.0, −115.0	42"	55"	6
			40"	58"	6
			37"	63"	6
		+120.0, −120.0	37"	63"	6

WALTER A. TILLIT JR. LICENSE No. 44167 STATE OF FLORIDA PROFESSIONAL ENGINEER

P.E. SEAL/SIGNATURE/DATE

FLORIDA BUILDING CODE (HIGH & NON HIGH VELOCITY HURRICANE ZONE)

©2020 TILTECO, INC.

TILTECO INC.
TILLIT TESTING & ENGINEERING COMPANY
6355 N.W. 36th. St., Ste. 305, VIRGINIA GARDENS, FL 33166
Phone : (305)871-1530 . Fax : (305)871-1531
CA-0006719
WALTER A. TILLIT Jr. P.E.
FLORIDA Lic. # 44167

SERIES VPF 8000 ALUMINUM AWNING WINDOW-LMI

ALUMINA DISTRIBUTION CENTER
15002 N.W. 107 AVENUE, SUITE # 1
HIALEAH GARDENS, FL 33018
PHONE: (305) 444-1198

REV. NO	DESCRIPTION	DATE	REV. No	DESCRIPTION	DATE
1	OLD 20-002	08/03/20	3		
2			4		

F.P.
DRAWN BY:

08/03/20
DATE:

20-227
DRAWING No.

SCHEDULE #8: VALID FOR INSTALLATIONS PER SHEET 17

MAXIMUM # OF ANCHORS "n" AT CLUSTER AT EA. END OF HORIZONTAL CENTER POST (3) AT JAMBS FOR VERTICAL COMBINATION OF HORIZONTALLY ORIENTED AWNING, CASEMENT & FIXED WINDOWS

SUBSTRATE	ANCHOR TYPE	MAX. ASD DESIGN PRESSURE RATING (psf.)	MAX. FRAME WIDTH	MAX. FRAME HEIGHT	"n"
POURED CONCRETE f'c=3000psi	(12) OR (12A)	+72.0, −72.0	74"	42"	6
		+75.0, −75.0 TO +80.0, −80.0	55"	42"	4
			58"	40"	4
			63"	37"	4
		+85.0, −85.0 TO +115.0, −115.0	55"	42"	6
			58"	40"	6
			63"	37"	6
		+120.0, −120.0	63"	37"	6
ALUMINUM OR STEEL	(13)	+72.0, −72.0	74"	42"	4
		+75.0, −75.0 TO +95.0, −95.0	55"	42"	4
			58"	40"	4
			63"	37"	4
		+100.0, −100.0 TO +115.0, −115.0	55"	42"	6
			58"	40"	6
			63"	37"	6
		+120.0, −120.0	63"	37"	6

* TOTAL NUMBER OF ANCHORS ("n") SHALL BE UNIFORMLY DISTRIBUTED AT (n/2) ANCHORS ABOVE & BELOW OF HORIZONTAL CENTER POST (3) AT JAMBS

SCHEDULE #8 (CONTINUED)

SUBSTRATE	ANCHOR TYPE	MAX. ASD DESIGN PRESSURE RATING (psf.)	MAX. FRAME WIDTH	MAX. FRAME HEIGHT	"n"
CONCRETE BLOCK	(12) OR (12A)	+72.0, −72.0	74"	42"	6
		+75.0, −75.0 TO +100.0, −100.0	55"	42"	6
			58"	40"	6
			63"	37"	6
		+105.0, −105.0 TO +115.0, −115.0	55"	42"	8
			58"	40"	8
			63"	37"	8
		+120.0, −120.0	63"	37"	8
WOOD	(12) OR (12A)	+72.0, −72.0	74"	42"	6
		+75.0, −75.0 TO +80.0, −80.0	55"	42"	4
			58"	40"	4
			63"	37"	4
		+85.0, −85.0 TO +115.0, −115.0	55"	42"	6
			58"	40"	6
			63"	37"	6
		+120.0, −120.0	63"	37"	6

WALTER A. TILLIT JR. LICENSE No. 44167 STATE OF FLORIDA PROFESSIONAL ENGINEER

P.E. SEAL/SIGNATURE/DATE

FLORIDA BUILDING CODE (HIGH & NON HIGH VELOCITY HURRICANE ZONE)

©2020 TILTECO, INC.

TILTECO INC.
TILLIT TESTING & ENGINEERING COMPANY
6355 N.W. 36th. St., Ste. 305, VIRGINIA GARDENS, FL 33166
Phone : (305)871-1530 . Fax : (305)871-1531
CA-0006719
WALTER A. TILLIT Jr. P.E.
FLORIDA Lic. # 44167

SERIES VPF 8000 ALUMINUM AWNING WINDOW-LMI

ALUMINA DISTRIBUTION CENTER
15002 N.W. 107 AVENUE, SUITE # 1
HIALEAH GARDENS, FL. 33018
PHONE: (305) 444-1198

REV. NO	DESCRIPTION	DATE	REV. No	DESCRIPTION	DATE
1	OLD 20-002	08/03/20	3		
2			4		

F.P.
DRAWN BY:

08/03/20
DATE:

20-227
DRAWING No.